ELN | EL-NIÑO™

HAND DRYER

5 YEAR* WARRANTY

THE PERFECT COMBINATION OF POWER AND STYLE

The EL-NIÑO is absolutely incredible; you have to try it to believe it. This powerful hand dryer dries hands completely in only ten seconds. The EL-NIÑO is a quiet, energy-efficient solution that combines quick drying with overall savings. This state-of-the-art hand dryer offers four personalized operating modes to meet your needs. Save time and money with the stylish EL-NIÑO!

NOICE LEVEL AND HEAT CONTROL
FOUR PERSONALIZED MODES

ENERGY EFFICIENT IN ECONOMICAL AND HARMONY MODES

HEAVY-DUTY DIE-CAST ALUMINUM ALLOY SHELL

STYLISH AND COMPACT

SEMI-RECESSED INSTALLATION
LESS THAN 4 INCHES

COLOURS
- **standard:** white
- **luxury finish:** brushed chrome (surcharge)
- **ORORA (optional):** refer to www.stelpro.com/en-CA/orora

FINISH
- epoxy-polyester powdercoat or chrome-plated

MANUFACTURING
- rib reinforced shell, solidly constructed of die-cast aluminum alloy
- lightweight, heavy duty and rust-proof shell
- wall bracket with two chrome-plated tamper-proof bolts

ELEMENT
- nichrome element located in motor section

CONTROL
- four personalized operating modes to meet your needs
- infrared optical sensor located next to the air outlet activates and deactivates the hand dryer
- 60-second lockout feature is activated if hands are not removed before this time

INSTALLATION
- surface mounted
- optional semi-recessed installation with depth of 4 inches or less; meets ADA standards (Americans with Disabilities Act)

WARRANTY
- five years,*three years on electronic components

TECHNICAL SPECIFICATIONS

PRODUCT	POWER (WATTS)*			VOLTAGE	AMPERAGE	WEIGHT		PRICE	
CODE	ELEMENT	MOTOR	TOTAL	VOLTS	AMPERES	KG	LB	W	BC
ELNV0901A	900	550	1450	120	12	4.4	9.8	**728.00**	**851.00**
ELNV0902A	900	550	1450	240	6	4.4	9.8	**728.00**	**851.00**
ELNV0908A	900	550	1450	208	7	4.4	9.8	**728.00**	**851.00**

Add W for white or BC for brushed chrome (consult the optional colours chart or contact your °STELPRO representative for all other colours).
*Data obtained in Normal/High mode

°STELPRO

°STELPRO reserves the right to modify descriptions, manufacturing specifications or prices without prior notice. **No returns accepted on optional-colour products.**
For all the latest models and prices, please refer to our website at www.stelpro.com.

c UL us LISTED

FC_ELN_EN_311018

OPERATING MODES

The El-Niño's built-in electronic control lets you personalize your unit to meet all your needs.

MODE	ENERGY SAVINGS	AIR SPEED OR AIR FLOW	HEATING POWER	NOISE LEVEL	DRYING TIME
ULTIMATE – Normal/High mode High air speed and full heating power for quick drying **Ideal for:** stadiums, arenas, theatres, public places and warehouses	---				10 sec
COMFORT – Normal/Low mode Reduced air speed and moderate heating power for comfortable noise level and heat range **Ideal for:** libraries, small restaurants and coffee shops	---				15 sec
ECONOMICAL – Eco/High mode High air speed without heat for quick drying with energy and cost savings **Ideal for:** schools, universities, amusement parks, warehouses and large restaurants			---		15 sec
HARMONY – Eco/Low mode Reduced air speed without heat for energy savings and a moderate noise level **Ideal for:** hospitals, libraries, daycares, small restaurants and coffee shops			---		20 sec

MODE	AIR SPEED (LFM)		TOTAL POWER	NOISE LEVEL (DB)	
	AT AIR OUTLET	AT HAND LEVEL*	WATTS	WITHOUT HANDS	WITH HANDS
ULTIMATE	19 000	16 000	1450	77	90
COMFORT	11 400	9600	1175	72	85
ECONOMICAL	19 000	16 000	550	77	90
HARMONY	11 400	9600	465	72	85

*4 inches below

°STELPRO reserves the right to modify descriptions, manufacturing specifications or prices without prior notice. **No returns accepted on optional-colour products.**
For all the latest models and prices, please refer to our website at www.stelpro.com.

TECHNICAL DRAWINGS

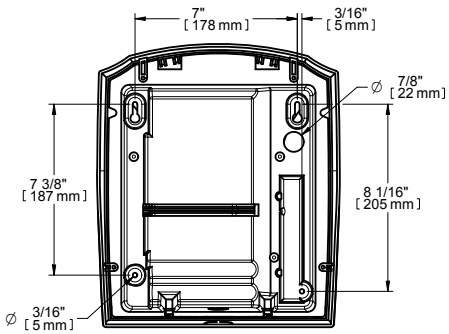

BACK

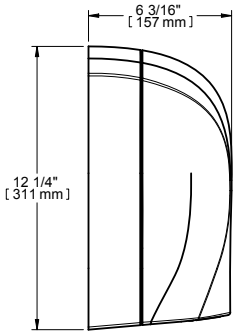

SIDE

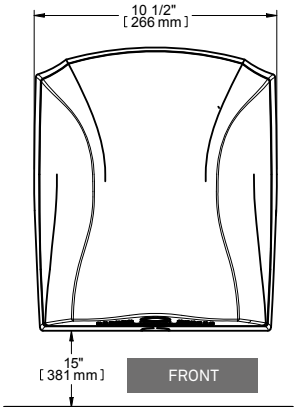

FRONT

FLOOR OR COUNTER

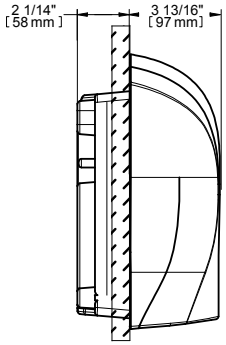

RECESSED

RECOMMENDED INSTALLATION HEIGHTS

Distance between floor and bottom of hand dryer

MEN	WOMEN	TEENAGERS	CHILDREN	HANDICAPPED
45 in. (115 cm)	43 in. (110 cm)	41 in. (105 cm)	35 in. (90 cm)	37 in. (95 cm)

3 LEVELS OF DETECTION

Adjust the sensitivity level of your hand dryer to meet usage requirements.

Detection distances may vary depending on lighting conditions.

MAXIMAL DETECTION – STANDARD (APPROX. 4 IN. – 10 CM)

MEDIUM DETECTION – DECREASED (APPROX. 3 IN. – 7.6 CM)

MINIMAL DETECTION – MINIMUM (APPROX. 2 IN. – 5 CM)

ACCESSORIES

PRE-DRILLED SLEEVE FOR ELECTRICAL CONNECTION

The pre-drilled sleeve allows for an electrical connection to the top of the unit in the case when access to the junction box from inside the wall or the bottom of the unit is problematic or not required (only available for surface mounted installation).

WALL GUARD

The wall guard protects the wall under the hand dryer from drops of water due to wet hands being blown dry and makes cleaning easier.

PRODUCT	DESCRIPTION	PRICE
ELNKOE	Pre-drilled sleeve for electrical connection	**35.00**
SHDXL-89W	Wall guard - white (15 3/4 in. x 31 3/4 in. x 1/16 in. – 40 cm x 81 cm x 0.16 cm) – set of two	**268.00**
SHDXL-89B	Wall guard - black (15 3/4 in. x 31 3/4 in. x 1/16 in. – 40 cm x 81 cm x 0.16 cm) – set of two	**268.00**
SHDXL-89S	Wall guard - stainless steel (15 3/4 in. x 31 3/4 in. x 1/16 in. – 40 cm x 81 cm x 0.16 cm) – set of two	**427.00**

*STELPRO reserves the right to modify descriptions, manufacturing specifications or prices without prior notice. **No returns accepted on optional-colour products.**
For all the latest models and prices, please refer to our website at www.stelpro.com.

EL-NIÑO