MM420

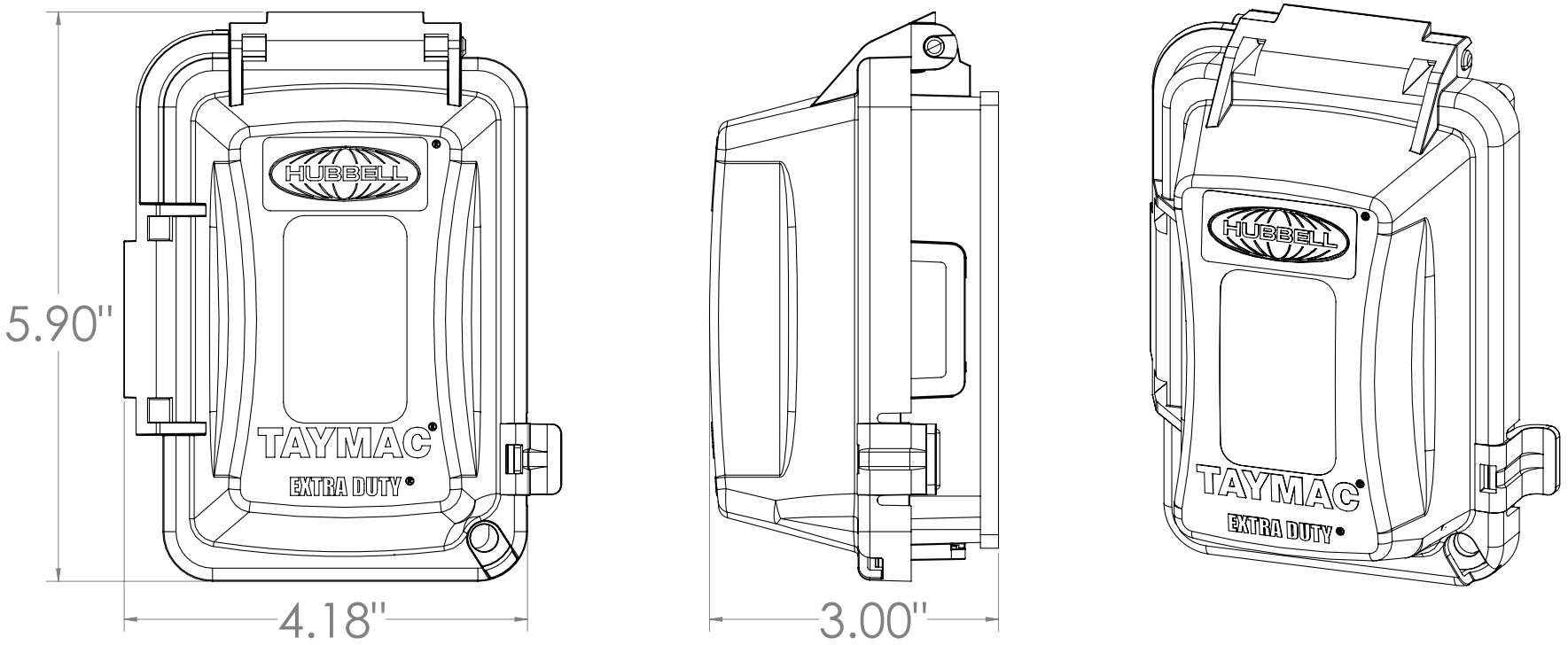
5.90"
4.18"
3.00"
HUBBELL
TAYMAC
EXTRA DUTY
HUBBELL
TAYMAC
EXTRA DUTY