SIEMENS

Data sheet 3SU1050-0BB20-0AA0

Pushbutton, 22 mm, round, metal, shiny, red, pushbutton, raised momentary contact type

product brand name	SIRIUS ACT
product designation	Pushbuttons
design of the product	Actuating/signaling element
product type designation	3SU1
product line	Metal, shiny, 22 mm
Enclosure	
number of command points	1
Actuator	
design of the actuating element	Raised button
principle of operation of the actuating element	momentary contact type
product extension optional	
● light source	No
● contact module	Yes
color of the actuating element	red
material of the actuating element	plastic
shape of the actuating element	round
outer diameter of the actuating element	29.5 mm
Front ring	
product component front ring	Yes
design of the front ring	Standard
material of the front ring	Metal, high gloss
color of the front ring	silver
General technical data	
protection class IP	IP66, IP67, IP69(IP69K)
degree of protection NEMA rating	1, 2, 3, 3R, 4, 4X, 12, 13
shock resistance	
● according to IEC 60068-2-27	sinusoidal half-wave 15g / 11 ms
vibration resistance	
● according to IEC 60068-2-6	10 ... 500 Hz: 5g
operating frequency maximum	3 600 1/h
mechanical service life (operating cycles) typical	10 000 000
reference code according to IEC 81346-2	S
Substance Prohibitance (Date)	10/01/2014
Ambient conditions	
ambient temperature	
● during operation	-25 ... +70 °C
● during storage	-40 ... +80 °C
environmental category during operation according to IEC 60721	3M6, 3S2, 3B2, 3C3, 3K6 (with relative air humidity of 10 ... 95%)
Installation/ mounting/ dimensions	

Subject to change without notice
© Copyright Siemens

height	29.5 mm
width	29.5 mm
shape of the installation opening	round
mounting diameter	22.3 mm
positive tolerance of installation diameter	0.4 mm
mounting height	16.2 mm
installation width	29.5 mm
installation depth	24.3 mm

Certificates/ approvals

General Product Approval		Declaration of Conformity
CSA	Confirmation	UL, EAC, CE EG-Konf., UKCA

Test Certificates		Marine / Shipping			
Special Test Certificate	Type Test Certificates/Test Report	ABS	LRS	PRS	RINA

other	Environment
Confirmation	Environmental Confirmations

Further information

Siemens has decided to exit the Russian market (see here).
https://press.siemens.com/global/en/pressrelease/siemens-wind-down-russian-business
Siemens is working on the renewal of the current EAC certificates.
Please contact your local Siemens office on the status of validity of the EAC certification if you intend to import or offer to supply these products to an EAC relevant market (other than the sanctioned EAEU member states Russia or Belarus).
Information on the packaging
https://support.industry.siemens.com/cs/ww/en/view/109813875
Information- and Downloadcenter (Catalogs, Brochures,…)
https://www.siemens.com/ic10
Industry Mall (Online ordering system)
https://mall.industry.siemens.com/mall/en/en/Catalog/product?mlfb=3SU1050-0BB20-0AA0
Cax online generator
http://support.automation.siemens.com/WW/CAXorder/default.aspx?lang=en&mlfb=3SU1050-0BB20-0AA0
Service&Support (Manuals, Certificates, Characteristics, FAQs,...)
https://support.industry.siemens.com/cs/ww/en/ps/3SU1050-0BB20-0AA0
Image database (product images, 2D dimension drawings, 3D models, device circuit diagrams, EPLAN macros, ...)
http://www.automation.siemens.com/bilddb/cax_de.aspx?mlfb=3SU1050-0BB20-0AA0&lang=en

Subject to change without notice
© Copyright Siemens

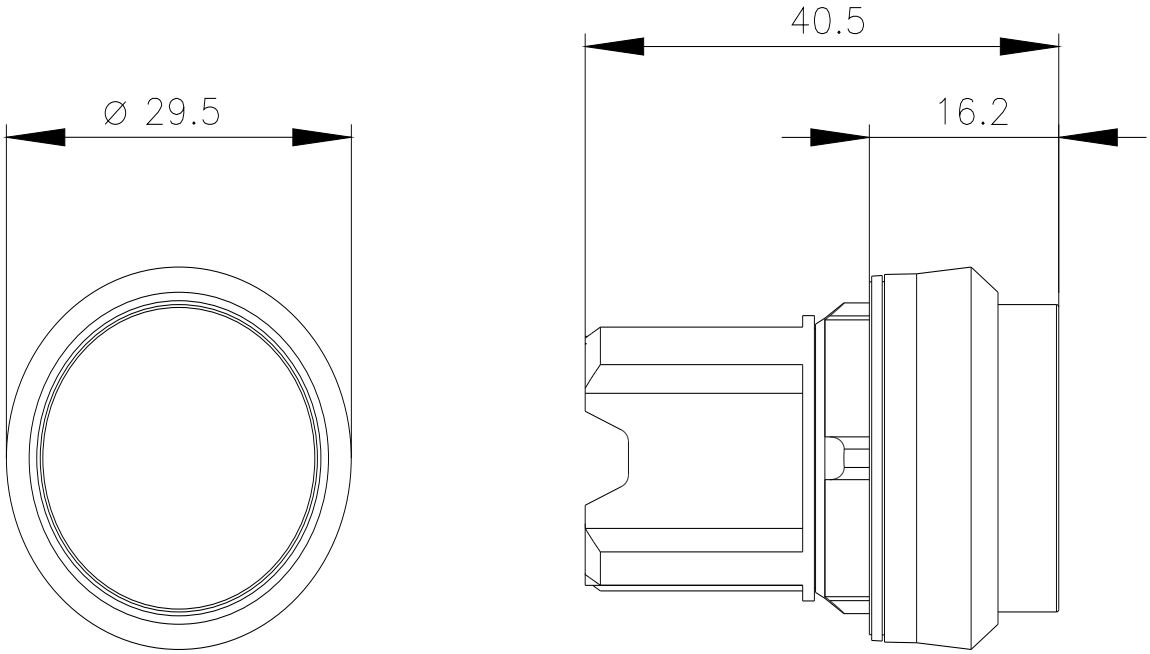

last modified: 1/26/2022

Subject to change without notice
© Copyright Siemens