SIEMENS

Data sheet 3SU1401-1BB00-1AA0

LED module with integrated LED 24 V AC/DC, amber, screw terminal, for front plate mounting, Minimum order quantity 5 or a multiple thereof

product brand name	SIRIUS ACT
product designation	LED module
product type designation	3SU1
General technical data	
product component	
● diode	Yes
● lamp transformer	No
● light source	Yes
● series resistor	No
insulation voltage rated value	320 V
degree of pollution	3
type of voltage of the operating voltage	AC/DC
● for actuation	AC/DC
surge voltage resistance rated value	4 kV
consumed current maximum	25 mA
protection class IP	
● of the enclosure	IP40
● of the terminal	IP20
shock resistance	
● according to IEC 60068-2-27	sinusoidal half-wave 15g / 11 ms
● for railway applications according to EN 61373	Category 1, Class B
vibration resistance	
● according to IEC 60068-2-6	10 ... 500 Hz: 5g
● for railway applications according to EN 61373	Category 1, Class B
operating period typical	100 000 h
reference code according to IEC 81346-2	P
Substance Prohibitance (Date)	10/01/2014
operating voltage 1	
● at AC	
— at 50 Hz rated value	24 V
— at 60 Hz rated value	24 V
● at DC rated value	24 V
relative positive tolerance of the operating voltage	20 %
relative negative tolerance of the operating voltage	20 %
Control circuit/ Control	
inrush current maximum	2 A
Connections/ Terminals	
type of electrical connection	screw-type terminals
type of connectable conductor cross-sections	
● solid with core end processing	2x (0.5 ... 0.75 mm²)
● solid without core end processing	2x (1.0 ... 1.5 mm²)

Subject to change without notice
© Copyright Siemens

● finely stranded with core end processing	2x (0.5 ... 1.5 mm²)
● finely stranded without core end processing	2x (1,0 ... 1,5 mm²)
● at AWG cables	2x (18 ... 14)
tightening torque with screw-type terminals	0.8 ... 0.9 N·m

Lamp

type of light source	LED
color of the light source	amber
light intensity	450 ... 1 120 mcd
certificate of suitability	
● ATEX	No
● IECEx	No

Ambient conditions

ambient temperature	
● during operation	-25 ... +70 °C
● during storage	-40 ... +80 °C
environmental category during operation according to IEC 60721	3M6, 3S2, 3B2, 3C3, 3K6 (with relative air humidity of 10 ... 95%, no condensation in operation permitted)

Installation/ mounting/ dimensions

fastening method	
● of modules and accessories	Front plate mounting
height	33.2 mm
width	9.8 mm
depth	29.4 mm
suitability for integration	
● plastic enclosure	Yes
● metal enclosure	Yes

Certificates/ approvals

General Product Approval	Declaration of Conformity	Test Certificates
Confirmation		Special Test Certificate

Test Certificates	Marine / Shipping
Type Test Certificates/Test Report	

other

Confirmation

Environmental Confirmations

Further information

Information- and Downloadcenter (Catalogs, Brochures,…)
https://www.siemens.com/ic10
Industry Mall (Online ordering system)
https://mall.industry.siemens.com/mall/en/en/Catalog/product?mlfb=3SU1401-1BB00-1AA0
Cax online generator
http://support.automation.siemens.com/WW/CAXorder/default.aspx?lang=en&mlfb=3SU1401-1BB00-1AA0
Service&Support (Manuals, Certificates, Characteristics, FAQs,...)
https://support.industry.siemens.com/cs/ww/en/ps/3SU1401-1BB00-1AA0
Image database (product images, 2D dimension drawings, 3D models, device circuit diagrams, EPLAN macros, ...)
http://www.automation.siemens.com/bilddb/cax_de.aspx?mlfb=3SU1401-1BB00-1AA0&lang=en

Subject to change without notice
© Copyright Siemens

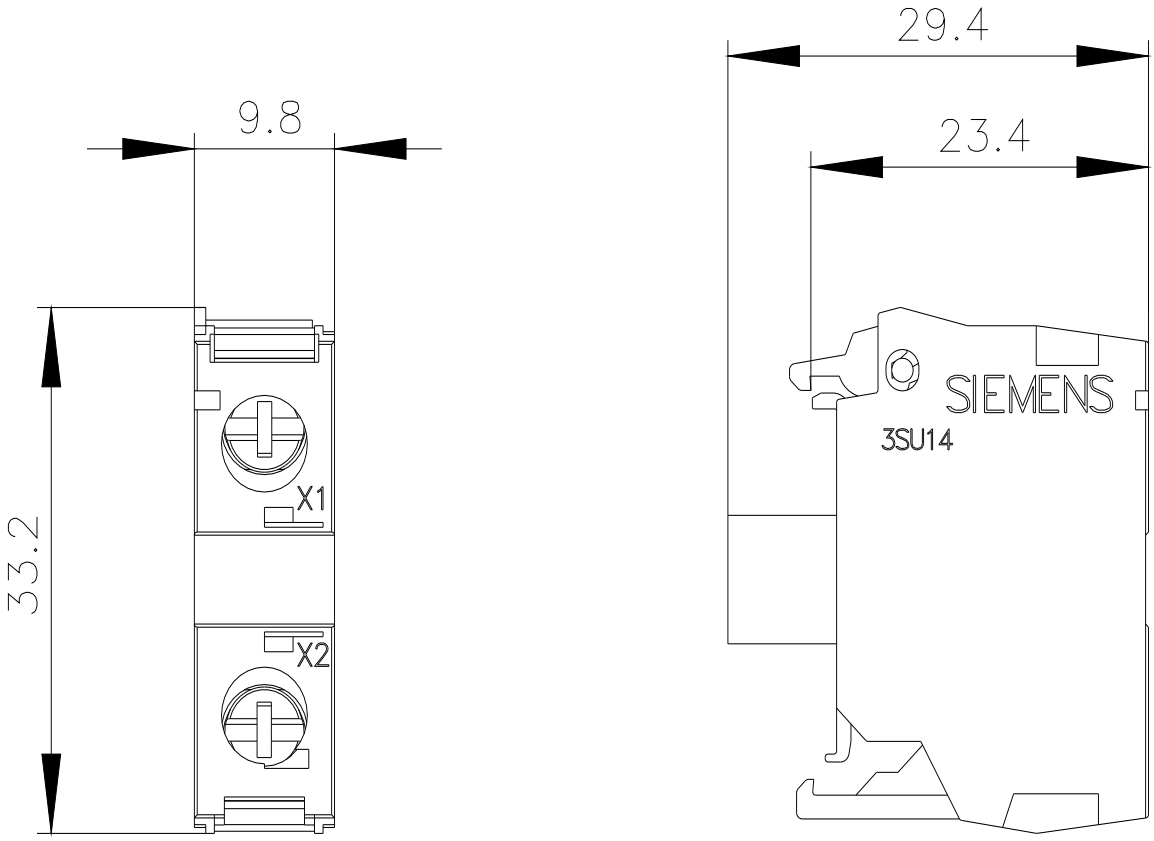

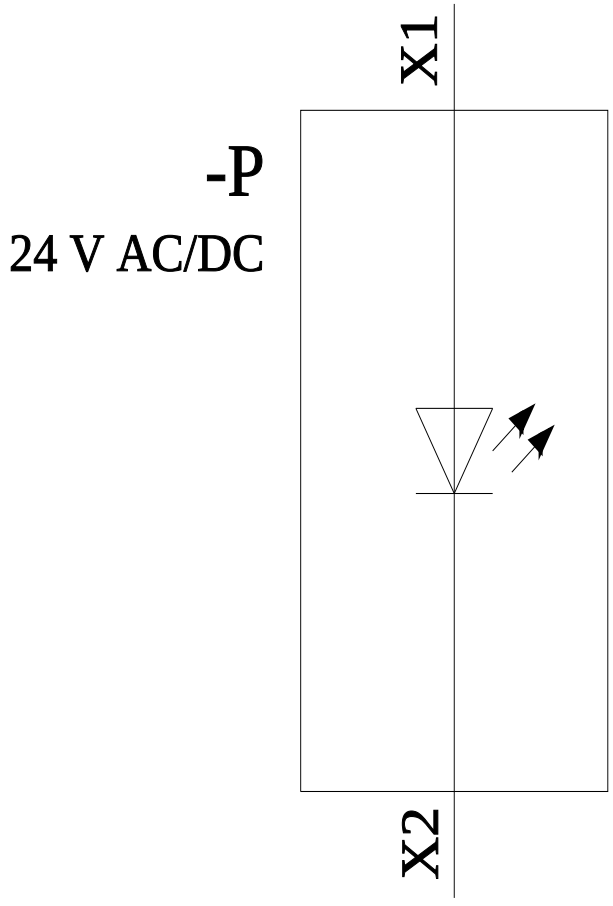

last modified: 3/9/2022

Subject to change without notice
© Copyright Siemens

Subject to change without notice
© Copyright Siemens