M-4734 | 4

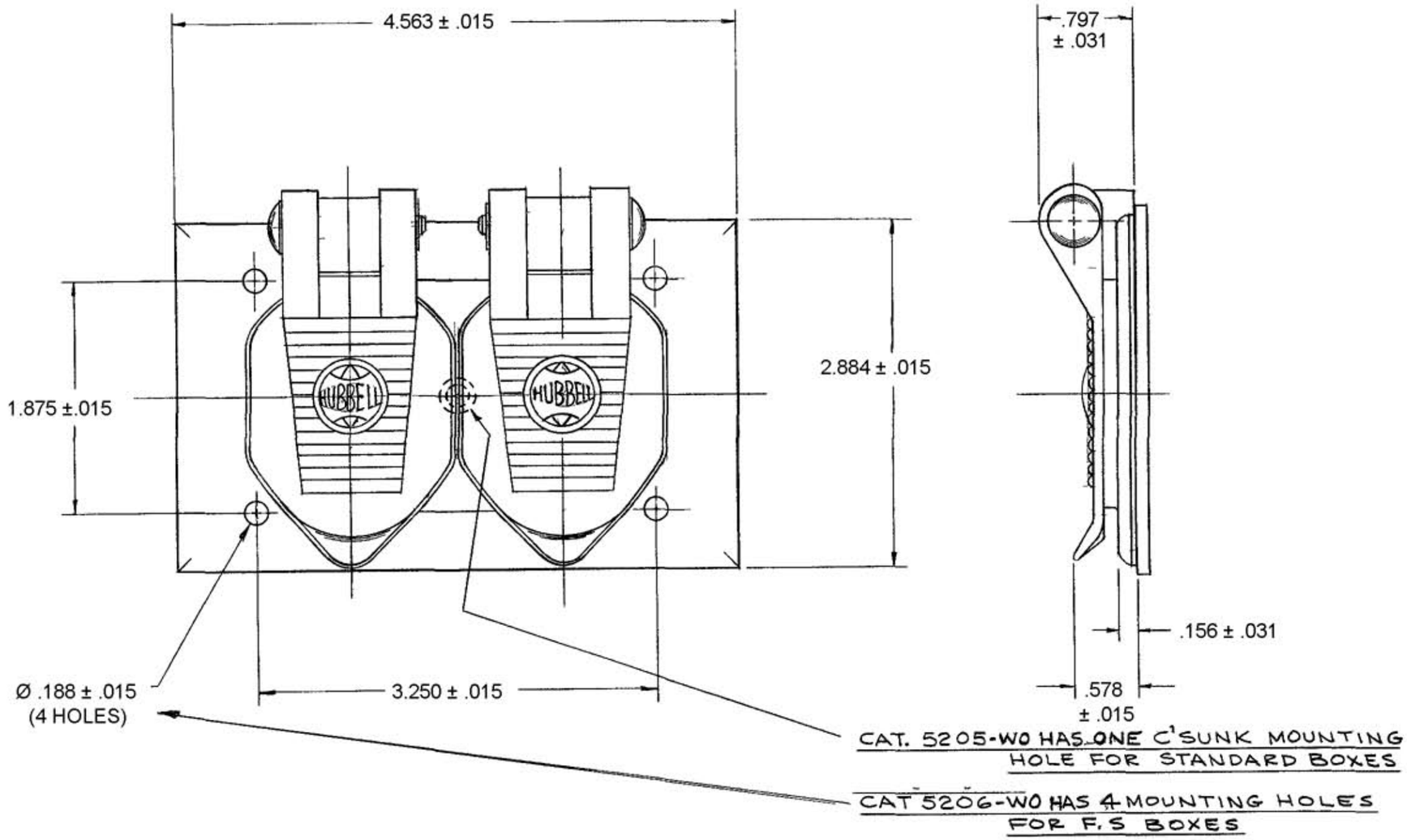

LIST OF PARTS

DESCRIPTION	MATERIAL	FINISH
OUTLET BOX COVER PL	CAST ALUM	LACQUER
OUTLET BOX COVER FLAP	CAST ALUM	LACQUER
HINGE PIN	STEEL	ZINC PLATE
COIL SPRING	ST STEEL	
RETAINING RING	ST. STEEL	
GASKET	RUBBER	

SYM	REVISIONS	APP	DATE
4	CONVERTED ALL DIMS TO 3 PL DECIMAL & ADDED TOL. ADDED "HBL" PREFIX TO CATALOGS, PER DCN #7794. AMZ DB		7-19-00
3	ADDED FINISH TO OUTET BOX COVER PL & FLAP, DIM 37/64 REMOVED CAT 5205 & 06 AJL CJC		3-6-90
2	CAT. 5205-WO & 5206-WO ADDED A.J.L.		5-26-82
1	CAT. 5205 ADDED A.J.L.		7-2-68

DIMENSION SHEET FOR CAT. NO. HBL5205WO & HBL5206WO

REPAIRABLE ☐ NON-REPAIRABLE ☒

B

M-4734

4

TITLE

HBL5205WO & HBL5206WO

DOUBLE HINGE COVER WEATHER PROOF PLATE FOR DUPLEX RECEPTACLES

TOLERANCES UNLESS OTHERWISE SPECIFIED

FRACTIONS ± 1/64
DECIMALS ± .005
ANGLES ± 2°

HARVEY HUBBELL, INC.
BRIDGEPORT, CONN.

DR. BY A.J.L. APP. BY
TR. BY SCALE FULL
CHK'D. BY J.C.H. DATE 11-21-67

CODE 74545