M-12917 | 1

CATALOG NUMBER	BODY COLOR	GOTCHA RING COLOR CODE	NPT HUB SIZE	CORD DIA. RANGE	Ø A (OVERALL)	(B) [4]	C	Ø D (THROAT DIA.)	*E ACROSS CORNERS	*E ACROSS FLATS
SHC1046	CAST ALUMINUM	WHITE	1"	.88–1.00 [22.2–25.4]	2.31 [58.7]	1.70 [43.2]	.66 [16.8]	1.02 [25.9]	2.28 [57.9]	2.00 [50.8]
SHC1047	CAST ALUMINUM	WHITE	1"	1.00–1.13 [25.4–28.6]	2.31 [58.7]	1.70 [43.2]	.66 [16.8]	1.02 [25.9]	2.28 [57.9]	2.00 [50.8]
SHC1048	CAST ALUMINUM	WHITE	1"	1.13–1.25 [28.6–31.7]	2.31 [58.7]	1.70 [43.2]	.66 [16.8]	1.02 [25.9]	2.28 [57.9]	2.00 [50.8]
SHC1049	CAST ALUMINUM	WHITE	1"	1.25–1.38 [31.7–34.9]	2.31 [58.7]	1.70 [43.2]	.66 [16.8]	1.02 [25.9]	2.28 [57.9]	2.00 [50.8]
SHC1050	CAST ALUMINUM	WHITE	1 1/4"	.75–.88 [19.0–22.2]	2.31 [58.7]	1.70 [43.2]	.73 [18.5]	1.27 [32.3]	2.44 [62.0]	2.15 [54.6]
SHC1051	CAST ALUMINUM	WHITE	1 1/4"	.88–1.00 [22.2–25.4]	2.31 [58.7]	1.70 [43.2]	.73 [18.5]	1.27 [32.3]	2.44 [62.0]	2.15 [54.6]
SHC1052	CAST ALUMINUM	WHITE	1 1/4"	1.00–1.13 [25.4–28.6]	2.31 [58.7]	1.70 [43.2]	.73 [18.5]	1.27 [32.3]	2.44 [62.0]	2.15 [54.6]
SHC1053	CAST ALUMINUM	WHITE	1 1/4"	1.13–1.25 [28.6–31.7]	2.31 [58.7]	1.70 [43.2]	.73 [18.5]	1.27 [32.3]	2.44 [62.0]	2.15 [54.6]
SHC1054	CAST ALUMINUM	WHITE	1 1/4"	1.25–1.38 [31.7–34.9]	2.31 [58.7]	1.70 [43.2]	.73 [18.5]	1.27 [32.3]	2.44 [62.0]	2.15 [54.6]
SHC1055	CAST ALUMINUM	WHITE	1 1/2"	.75–.88 [19.0–22.2]	2.31 [58.7]	1.70 [43.2]	.75 [19.1]	1.39 [35.3]	2.28 [57.9]	2.11 [53.6]
SHC1056	CAST ALUMINUM	WHITE	1 1/2"	.88–1.00 [22.2–25.4]	2.31 [58.7]	1.70 [43.2]	.75 [19.1]	1.39 [35.3]	2.28 [57.9]	2.11 [53.6]
SHC1057	CAST ALUMINUM	WHITE	1 1/2"	1.00–1.13 [25.4–28.6]	2.31 [58.7]	1.70 [43.2]	.75 [19.1]	1.39 [35.3]	2.28 [57.9]	2.11 [53.6]
SHC1058	CAST ALUMINUM	WHITE	1 1/2"	1.13–1.25 [28.6–31.7]	2.31 [58.7]	1.70 [43.2]	.75 [19.1]	1.39 [35.3]	2.28 [57.9]	2.11 [53.6]
SHC1059	CAST ALUMINUM	WHITE	1 1/2"	1.25–1.38 [31.7–34.9]	2.31 [58.7]	1.70 [43.2]	.75 [19.1]	1.39 [35.3]	2.28 [57.9]	2.11 [53.6]

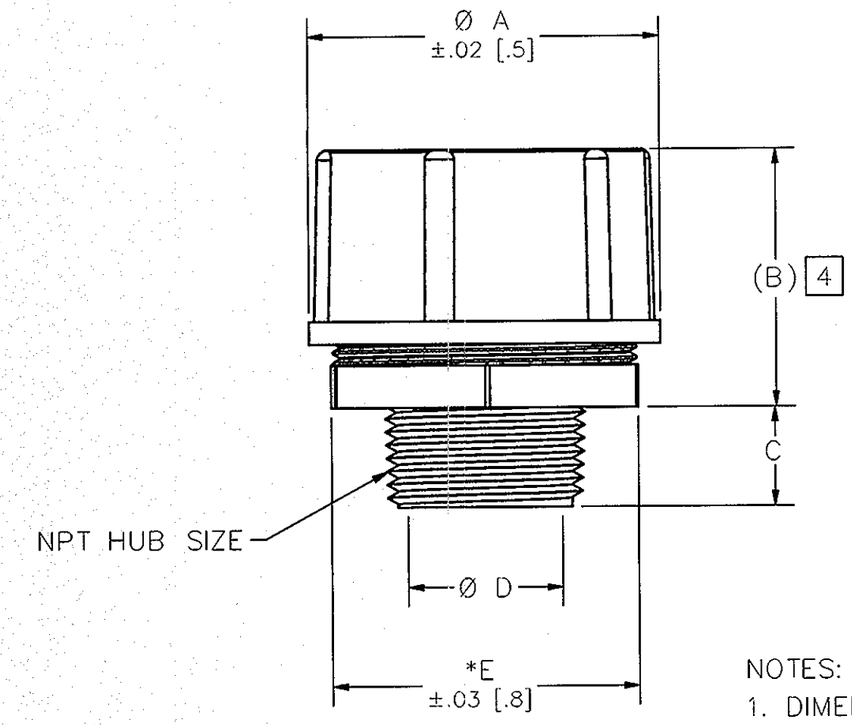

NOTES:
1. DIMENSIONS ARE IN INCHES [MM].
2. LOCKNUT PURCHASED SEPARATELY.
3. BUSHING COATED WITH AMBER PETROLEUM JELLY.

4 REFERENCE ONLY, DIMENSION MAY VARY.

LIST OF PARTS

DESCRIPTION	MATERIAL	FINISH
CORD CONNECTOR BODY STR. MALE	CAST ALUMINUM	
BUSHING	BLACK NEOPRENE	SEE NOTE 3
GOTCHA RING	NYLON	SEE TABLE
NUT	ALUMINUM	

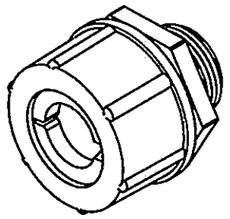

CATALOG NO. SHC1046
(NOT SHOWN TO SCALE)

REV	DESCRIPTION	APP	DATE
1	INITIAL RELEASE PER DCN 21189	DDL PJB	05/06/15

THE DESIGN AND DIMENSIONS OF THE PRODUCT SHOWN ON THIS DRAWING ARE SUBJECT TO CHANGE WITHOUT NOTICE

TITLE
STRAIGHT ALUMINUM CORD CONNECTOR FORM 5

TOLERANCES UNLESS OTHERWISE SPECIFIED
.XX = ± .01
.XXX = ± .005
ANGLES = ± 2°

WIRING DEVICE-KELLEMS
HUBBELL INCORPORATED
SHELTON, CT

DR. BY	SR	APP. BY	
TR. BY		SCALE	1:1
CHK. BY	DDL	DATE	05/06/15

DIMENSION SHEET FOR CAT. NO.
SEE TABLE

REPAIRABLE ☐
NON-REPAIRABLE ☐

B

M-12917

1

CODE 74545