M-10366 | 1

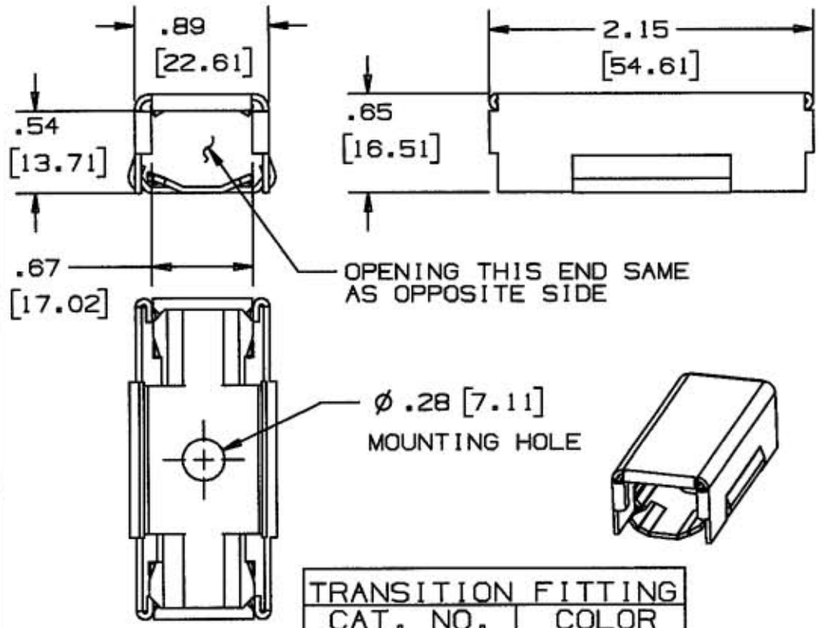

TRANSITION FITTING	
CAT. NO.	COLOR
HBL500TFIV	IVORY

NOTE: FOR USE WITH WIREMOLD® V500 RACEWAY

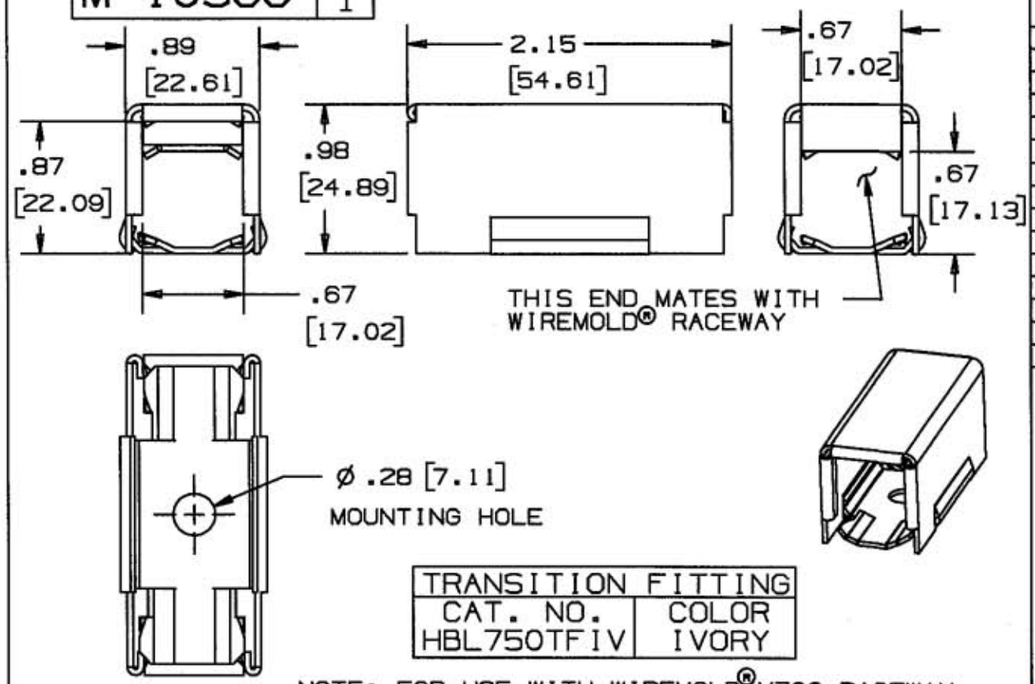

TRANSITION FITTING	
CAT. NO.	COLOR
HBL750TFIV	IVORY

NOTE: FOR USE WITH WIREMOLD® V700 RACEWAY

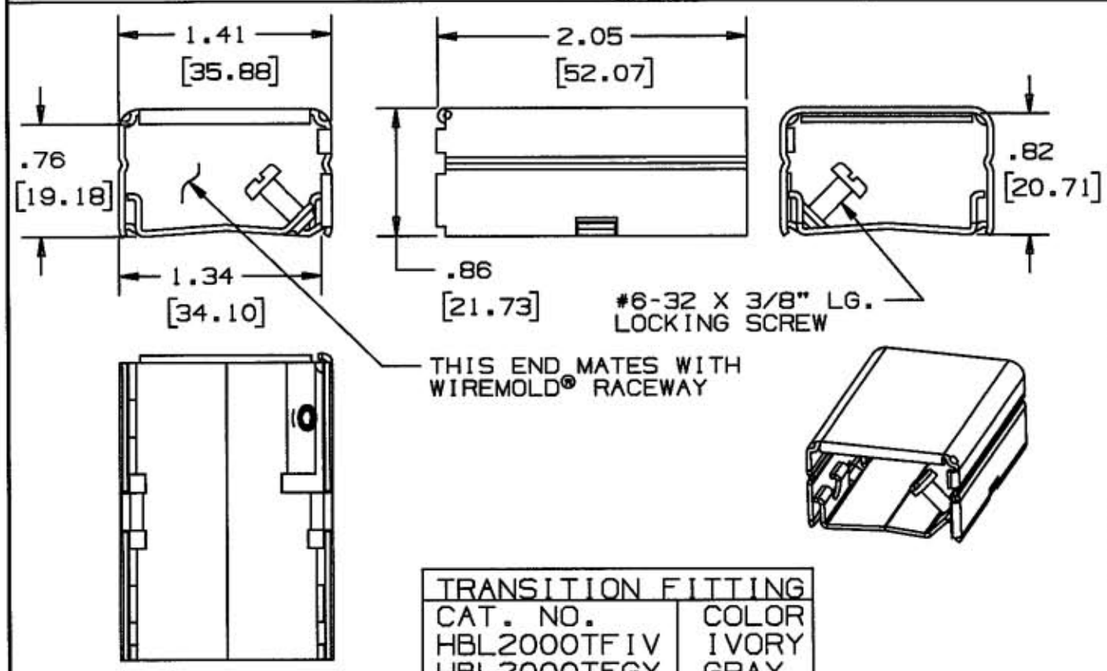

TRANSITION FITTING	
CAT. NO.	COLOR
HBL2000TFIV	IVORY
HBL2000TFGY	GRAY

NOTE:
FOR USE WITH WIREMOLD® V2000 & G2000 RACEWAY
& 2000 PLUGMOLD MULTI-OUTLET SYSTEMS

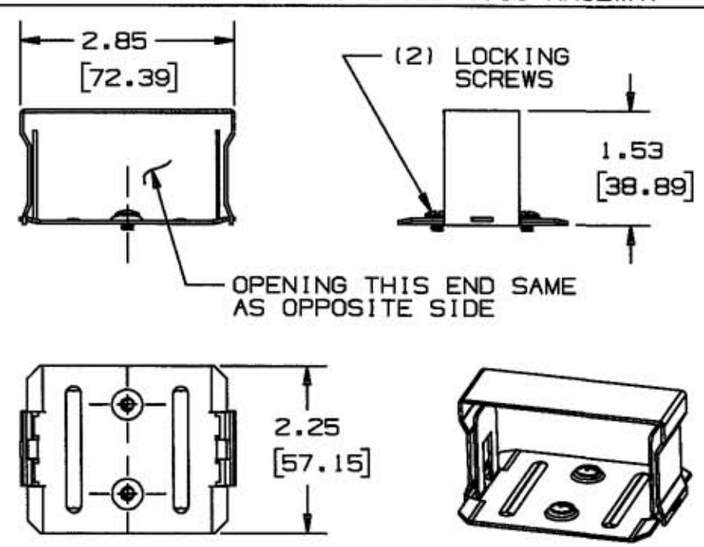

TRANSITION FITTING	
CAT. NO.	COLOR
HBL3000TFIV	IVORY
HBL3000TFGY	GRAY

NOTE:
FOR USE WITH WIREMOLD® V3000 & G3000 RACEWAY

NOTE: ALL DIMENSIONS IN INCHES AND [MM]

CODE 74545

LIST OF PARTS

DESCRIPTION	MATERIAL	FINISH
COVER, TRANS. FITTING	STEEL	PAINTED
BASE, TRANS. FITTING	STEEL	GALVANIZED

SYM	REVISIONS	APP	DATE
1	RELEASED PER DCN 13536		11/13/06

THE DESIGN AND DIMENSIONS OF THE PRODUCT SHOWN ON THIS DRAWING ARE SUBJECT TO CHANGE WITHOUT NOTICE

TITLE

TRANSITION FITTINGS
METAL RACEWAY

TOLERANCES UNLESS OTHERWISE SPECIFIED
FRACTIONS ±1/64
DECIMALS ±.005
ANGLES ±2°

WIRING DEVICE-KELLEMS
HUBBELL INCORPORATED
BRIDGEPORT, CT

DR. BY SRE | APP. BY
TR. BY | SCALE 1:1
CHK'D BY | DATE 11/13/06

DIMENSION SHEET FOR CAT. NO. SEE TABLE

REPAIRABLE ☐ NON-REPAIRABLE ☒

B

M-10366

1