M-13460 | 1

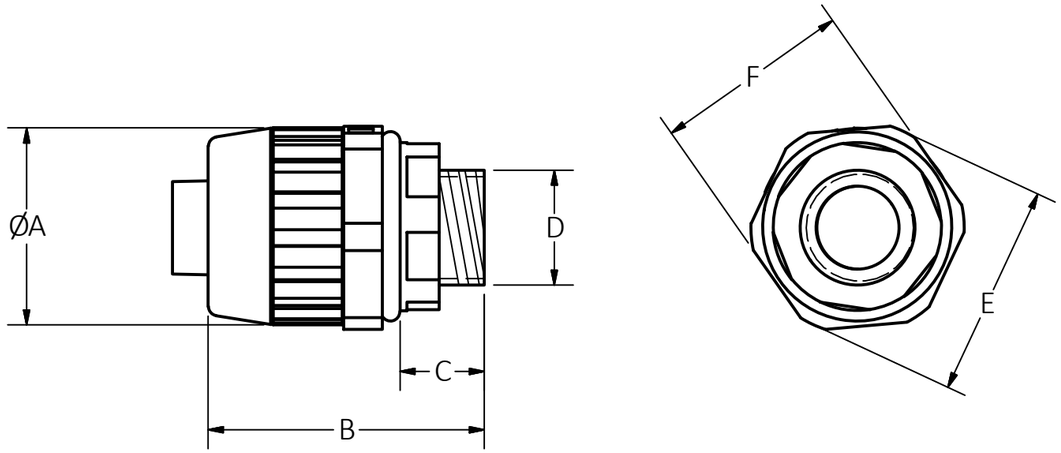

CAT NO. BLACK	CAT NO. GRAY	NPT THREAD SIZE (MD)*	CONDUIT TRADE SIZE (MD)*	- A - INCH (mm)	- B - INCH (mm)	- C - INCH (mm)	- D - INCH (mm)	- E - INCH (mm) A/C*	- F - INCH (mm) A/F*	- G - INCH (mm)
P038NBKA	P038NGYA	1/2 (16)	3/8 (12)	1.30 (33.0)	2.14 (54.4)	0.57 (14.5)	0.55 (14.0)	1.41 (35.8)	1.30 (33.0)	0.875 (22.2)
P050NBKA	P050NGYA	1/2 (16)	1/2 (16)	1.30 (33.0)	2.14 (54.4)	0.57 (14.5)	0.55 (14.0)	1.41 (35.8)	1.30 (33.0)	0.875 (22.2)
P075NBKA	P075NGYA	3/4 (21)	3/4 (21)	1.53 (38.9)	2.22 (56.4)	0.58 (14.7)	0.74(18.8)	1.85(47.0)	1.53 (38.9)	1.109 (28.2)
P100NBKA	P100NGYA	1 (27)	1 (27)	1.80 (45.7)	2.32 (58.9)	0.72 (18.3)	0.96 (24.4)	1.94 (49.3)	1.80 (45.7)	1.375 (34.9)

*MD = METRIC DESIGNATOR, A/C = ACROSS CORNERS, A/F = ACROSS FLATS

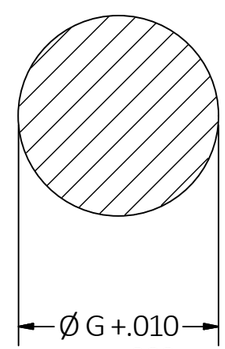

SUGGESTED CLEARANCE HOLE FOR NON THREADED MOUNTING

NOTES:
1. MATERIAL: 6/6 NYLON
2. TEMPERATURE RANGE: -30°F (-34°C) TO 225°F (107°C).
3. COLORS: SEE TABLE
4. RoHS COMPLIANCE: CONNECTORS MEET EU DIRECTIVE 2005/95/EC INCLUDING AMENDMENT 2005/618/EC.
5. AGENCY APPROVALS - UL LISTED AND CSA CERTIFIED.
6. PRIMARY DIMENSIONS ARE INCHES. UNITS IN SI ARE PROVIDED AS REFERENCE ONLY.
7. TOLERANCES: XX±.02, XXX±.005, ANGLES ±1°. GENERAL TOLERANCES DO NOT APPLY.

LIST OF PARTS

DESCRIPTION	MATERIAL	FINISH
CONNECTOR BODY	NYLON	BLACK/GRAY
O-RING	NEOPRENE	BLACK
LOCK NUT	NYLON	BLACK
FERRULE	NYLON	BLACK
COMPRESSION NUT	NYLON	BLACK/GRAY

REV	DESCRIPTION	APP	DATE
1	NEW RELEASE PER DCN 22362 MYA	FFS	9/21/16

THE DESIGN AND DIMENSIONS OF THE PRODUCT SHOWN ON THIS DRAWING ARE SUBJECT TO CHANGE WITHOUT NOTICE. DIMENSIONS ARE IN INCHES [mm].

TITLE

LIQUID-TIGHT NON- METALLIC STRAIGHT FITTING WITH DOMED NUT

WIRING DEVICE-KELLEMS
HUBBELL INCORPORATED
SHELTON, CT

TOLERANCES UNLESS OTHERWISE SPECIFIED
.XX = ± .01
.XXX= ± .005
ANGLE TOL. ±2'

DR. BY	MALLEN	SCALE	1 : 1
CHK. BY	FFS	DATE	9/21/16

DIMENSION SHEET FOR CAT. NO.

B

M-13460

1

CAGE CODE 74545