M-11683 | 1

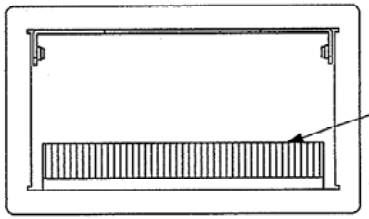

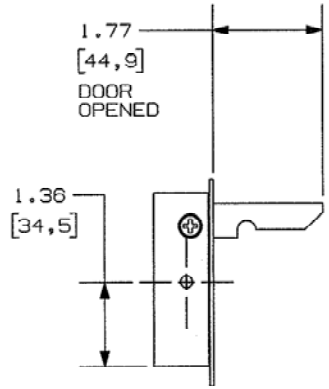

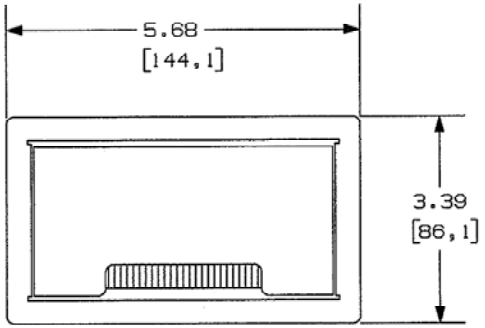

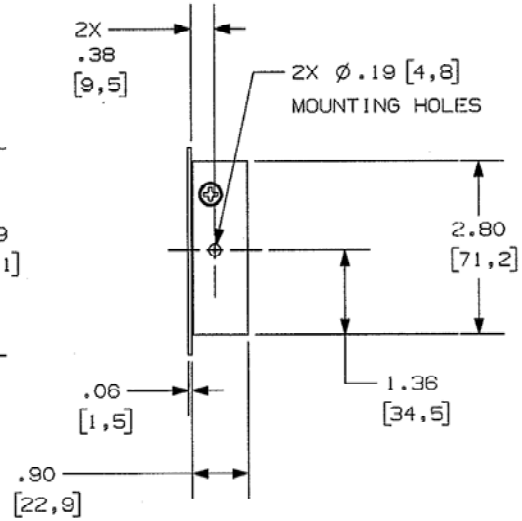

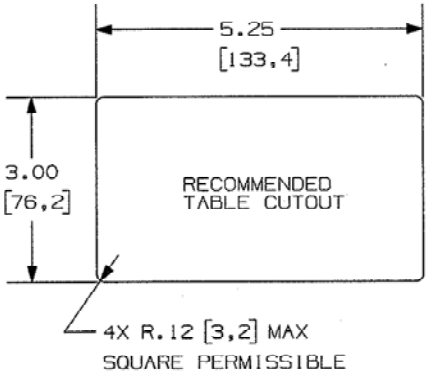

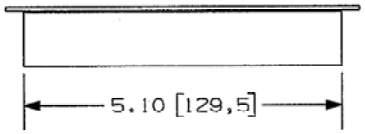

CATALOG NUMBER	FINISH
WSBFGROMBK	BLACK
WSBFGROMSV	SILVER
WSBFGROMBSS	BRUSHED STAINLESS STEEL
WSBFGROMBAL	BRUSHED ALUMINUM

1. ALL DIMENSIONS ARE IN INCHES AND [MILLIMETERS]
2. FOR DIMENSIONS OF POWER BASES SEE M-11682

LIST OF PARTS

DESCRIPTION	MATERIAL	FINISH
FRAME	STEEL	SEE TABLE
LID	STEEL	SEE TABLE
BEARINGS	NYLON	NATURAL
LID SEAL	NYLON	BLACK
FASTENERS	STEEL	SEE TABLE
DUST SHIELD	NYLON	BLACK

DIMENSION SHEET FOR CAT. NO. SEE TABLE

REPAIRABLE ☐ NON-REPAIRABLE ☒

SYM	REVISIONS	APP	DATE
1	RELEASED PER DCN16898		8/18/10

B

THE DESIGN AND DIMENSIONS OF THE PRODUCT SHOWN ON THIS DRAWING ARE SUBJECT TO CHANGE WITHOUT NOTICE

TITLE

TABLE GROMMET

TOLERANCES UNLESS OTHERWISE SPECIFIED
FRACTIONS ±1/64
DECIMALS ±.005
ANGLES ±2°

WIRING DEVICE-KELLEMS
HUBBELL INCORPORATED
BRIDGEPORT, CT

DR. BY SRE | APP. BY
TR. BY | SCALE 1:2
CHK'D BY | DATE 8/18/10

M-11683

1

CODE 74545