M-100571

TECHNICAL:

RATED VOLTAGE:	120VAC
OPERATING VOLTAGE RANGE:	85% TO 110% OF RATED
CURRENT:	UP TO 15 AMPS
FREQUENCY:	60Hz
TRIP LEVEL:	5mA +/- 1mA
PHASE:	SINGLE
RESPONSE TIME:	25 mS MAX.
DIELECTRIC WITHSTAND:	1500 VRMS ACROSS CONTACT 4000 VRMS BETWEEN CONDUCTORS AND ENCLOSURE
SURGE WITHSTAND:	6000V IMPULSE, 0.5 MICROSECOND RISE TIME 100KHZ RINGING FREQUENCY WITH 40% DECAY PER CYCLE
OPERATING TEMPERATURE RANGE:	-35 DEGREE CELSIUS TO +66 DEGREE CELSIUS
LEAKAGE CURRENT @ 93% HUMIDITY:	ZERO
OVERLOAD CURRENT:	90 AMPS, 50% INDUCTIVE
RF NOISE SUSCEPTIBILITY:	NORMAL OPERATION WITH 0.5 VRMS INJECTED ON POWER LINE WITH FREQUENCIES UP TO 450 MHz
LET GO LINE VOLTAGE:	60% OF RATED
GROUNDED NEUTRAL DETECTION:	6 OHMS OR LESS

GENERAL:

CONSTRUCTION:	COMMERCIAL GRADE DESIGN
TYPE:	CLASS A
POWER-UP TYPE:	AUTO AND MANUAL
OPEN NEUTRAL PROTECTION:	TRIPS UPON LOSS OF NEUTRAL
GROUNDED NEUTRAL PROTECTION:	TRIPS IF GROUND AND NEUTRAL CONNECT AT LOAD SIDE
POWER ON INDICATION:	LIGHTED GREEN LED
ENCLOSURE:	RAIN PROOF
MOUNTINF TYPE:	PORTABLE
WIRING APPLICATION:	3 WIRE, SINGLE PHASE (HOT, NEUTRAL, GROUND)
AGENCY APPROVAL:	U.L. AND CUL.

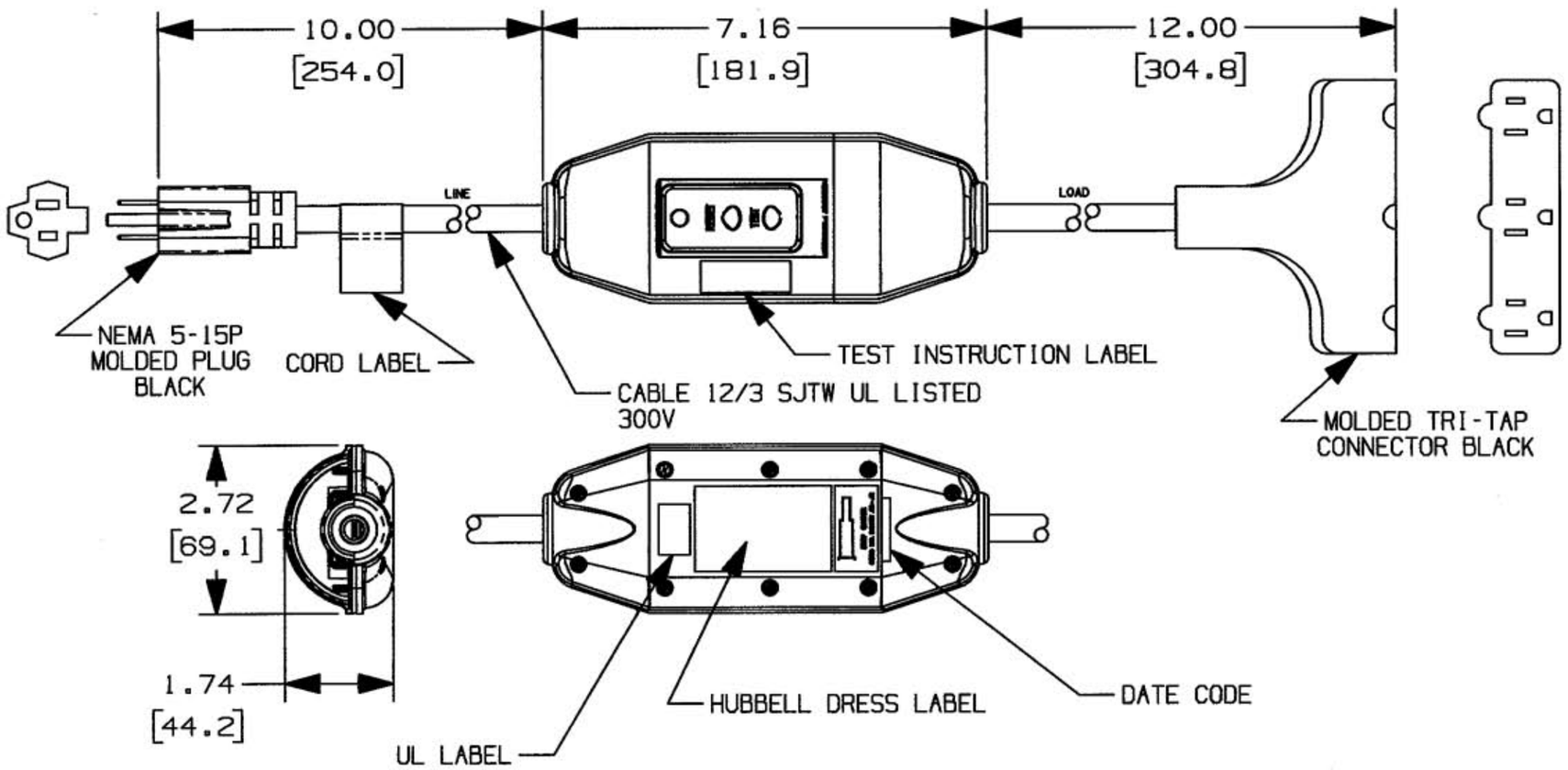

GFPIL15125TRIA & GFCI15125TRIA AUTOMATIC RESET
GFPIL15125TRIM & GFCI15125TRIM MANUAL RESET

CODE 74545

LIST OF PARTS

DESCRIPTION	MATERIAL	FINISH

DIMENSION SHEET FOR CAT. NO.

REPAIRABLE ☐ NON-REPAIRABLE ☐

SYM	REVISIONS	APP	DATE
1	INITIAL RELEASE PER DCN. 13040	SL	4-5-06

THE DESIGN AND DIMENSIONS OF THE PRODUCT SHOWN ON THIS DRAWING ARE SUBJECT TO CHANGE WITHOUT NOTICE

TITLE
15A. 120VAC 2 FT. GFCI ASSY. W/MOLDED TRI-TAP CONNECTOR

TOLERANCES UNLESS OTHERWISE SPECIFIED
FRACTIONS ±1/64
DECIMALS ±.005
ANGLES ±2°

WIRING DEVICE-KELLEMS
HUBBELL INCORPORATED
BRIDGEPORT, CT

DR. BY TJV	APP. BY SL
TR. BY	SCALE NONE
CHK'D BY	DATE 2-24-06

B

M-10057

1