M-12131 | 2

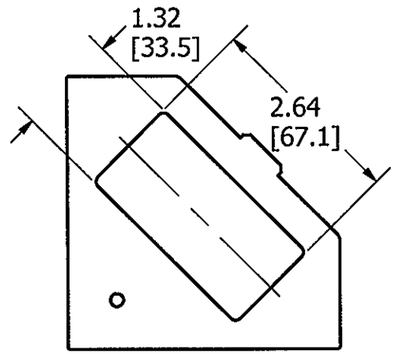

RAFB4SPDECO
STYLELINE®/DECORATOR/GFCI
COVER PLATE

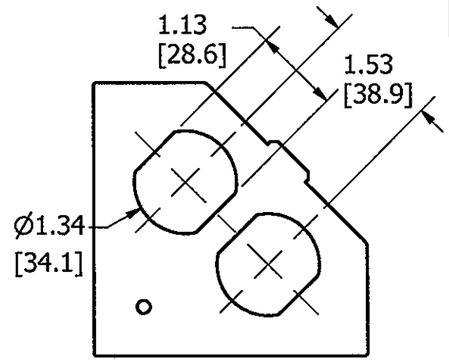

RAFB4SPDUPLEX
DUPLEX COVER PLATE

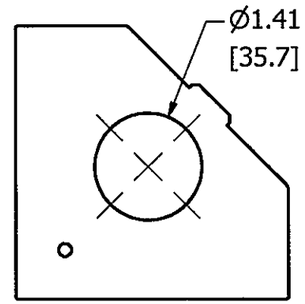

RAFB4SPTL14
Ø1.39 OPENING COVER PLATE

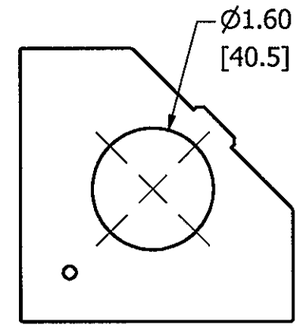

RAFB4SPTL16
Ø1.56 OPENING COVER PLATE
FOR THREE WIRE RECEPTACLES

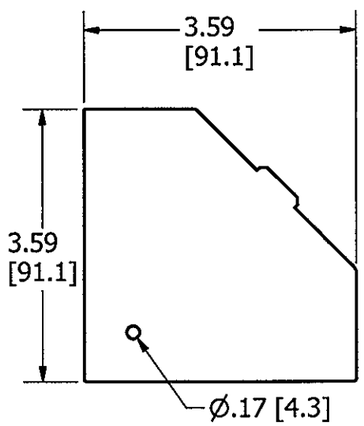

RAFB4SPBLANK
BLANK COVER PLATE

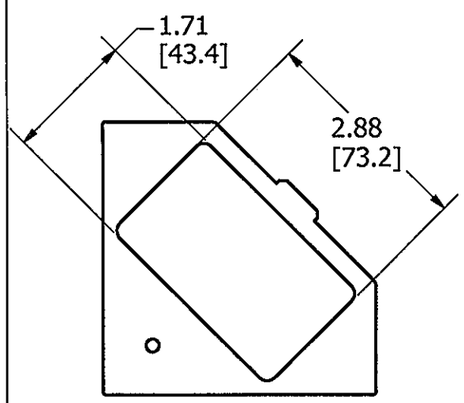

RAFB4SP3UIS
3U ISTATION™ COVER PLATE

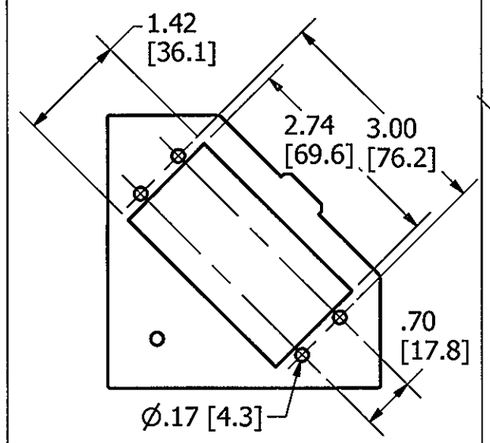

RAFB4SP2AAP
2 X 1 EXTRON® AAP COVER PLATE

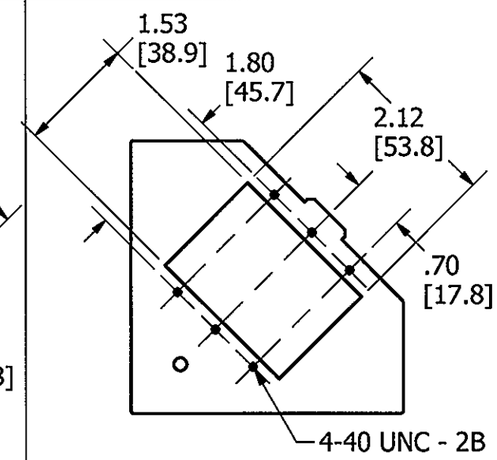

RAFB4SP3MAAP
3 X 1 EXTRON® MAAP COVER PLATE

LIST OF PARTS

DESCRIPTION	MATERIAL	FINISH
COVER PLATE	GALV STEEL	WHITE PAINT

NOTES:
1. ALL DIMENSIONS ARE IN INCHES [MILLIMETERS].
2. FOR USE WITH RAFB4 SERIES FLOOR BOXES
3. SUPPLIED WITH MOUNTING SCREW
4. USE DECORATOR OUTLET FRAMES FOR MOUNTING KEYSTONE JACKS

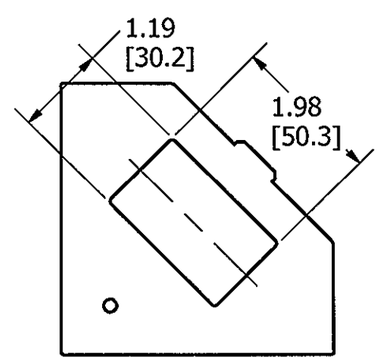

RAFB4SPORT
ORTRONICS® COVER PLATE

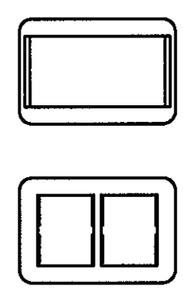

INCLUDES BEZELS TO
HOLD TWO TRACJACK® OR
ONE SERIES II® INSERT

SYM	DESCRIPTION	APP	DATE
2	REVISED PER DCN19958	SBW	11/4/13
1	INITIAL RELEASE DCN18547	SBW	5/3/12

THE DESIGN AND DIMENSIONS OF THE PRODUCT SHOWN ON THIS DRAWING ARE SUBJECT TO CHANGE WITHOUT NOTICE

TITLE
COVER PLATES,
RAFB4 SERIES FLOOR BOXES

TOLERANCES UNLESS OTHERWISE SPECIFIED
.XX = ± .01
.XXX = ± .005
ANGLES = ± 2°

WIRING DEVICE-KELLEMS
HUBBELL INCORPORATED
SHELTON, CT.

DR. BY	SBW	APP. BY	
TR. BY		SCALE	1/2
CHK'D BY	SM	DATE	2/2/2012

DIMENSION SHEET FOR CAT. NO. SEE FIELD

REPAIRABLE ☐ NON-REPAIRABLE ☒

B

M-12131

2

CODE 74545