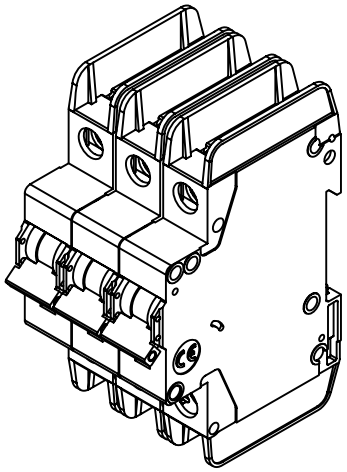

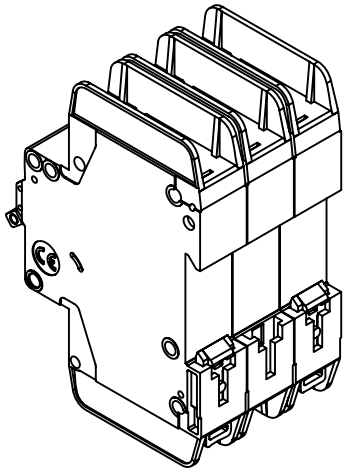

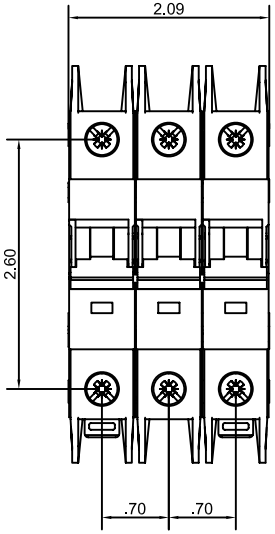

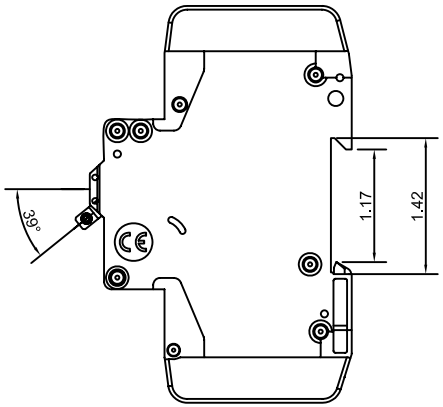

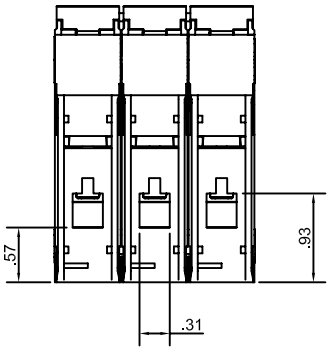

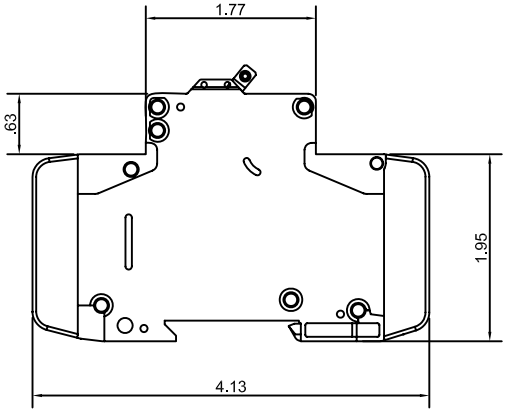

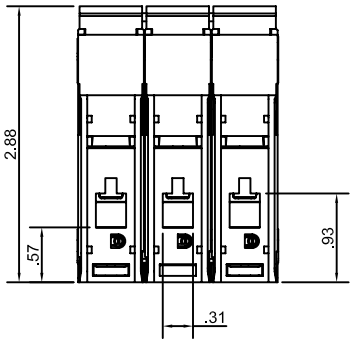

REVISION HISTORY			
H.M.	T.L.	05/15/09	1
NEW DRAWING			

UNLESS OTHERWISE SPECIFIED
DIMENSIONS IN INCHES
TWO PL. DEC. ±.02
THREE PLC. DEC. ±.005
ANGLES ±0.5
ONE PL. MM. ±0.5
TWO PL. MM. ±0.13
TORQUE ±10%

DIMENSIONS TO BE INTERPRETED IN ACCORDANCE WITH ASME Y14.5M-1994

X.XX±XX SYMBOL DEFINITIONS PER DRAWING 652A2750
ST

DRAFTER	H. MAZARA	DATE 5/15/2009
ENGINEER	T. LATHROP	
MFG.ENG.		
REFERENCE		
NEXT ASSY.		
MATERIAL		
MATERIAL SPEC.		
FINISH		

EATON CORPORATION - CONFIDENTIAL AND PROPRIETARY
NOTICE TO PERSONS RECEIVING THIS DOCUMENT AND/OR TECHNICAL INFORMATION THIS DOCUMENT, INCLUDING THE DRAWING AND INFORMATION CONTAINED THEREON, IS CONFIDENTIAL AND IS THE EXCLUSIVE PROPERTY OF EATON CORPORATION, AND IS MERELY ON LOAN AND SUBJECT TO RECALL BY EATON AT ANY TIME. BY TAKING POSSESSION OF THIS DOCUMENT, THE RECIPIENT ACKNOWLEDGES AND AGREES THAT THIS DOCUMENT CANNOT BE USED IN ANY MANNER ADVERSE TO THE INTERESTS OF EATON AND THAT NO PORTION OF THIS DOCUMENT MAY BE COPIED OR OTHERWISE REPRODUCED WITHOUT THE PRIOR WRITTEN CONSENT OF EATON. IN THE CASE OF CONFLICTING CONTRACTUAL PROVISIONS, THIS NOTICE SHALL GOVERN THE STATUS OF THIS DOCUMENT.

C

TITLE
MINIATURE CIRCUIT BREAKER
UL489 DIN RAIL MOUNT
WMZT 3 POLE

THIRD ANGLE PROJECTION

PROJECT NO	DWG NO	SCALE	MODEL FILENAME	PARTS LIST	SHEET
L7CST51981	67D9123	1 : 1	67D9123.iam		1 OF 1