TOP VIEW

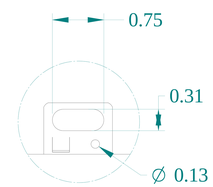


DETAIL Z
TYP

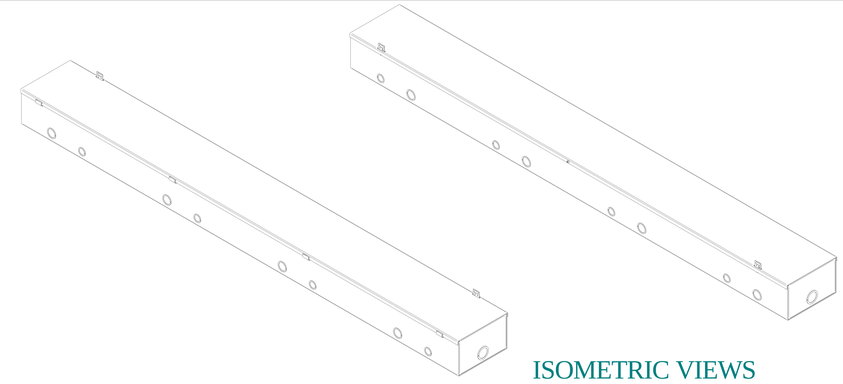

ISOMETRIC VIEWS

SECTION V-V

SIDE VIEW

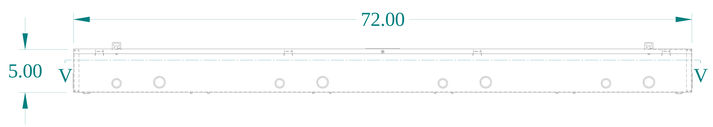


FRONT VIEW

SIDE VIEW

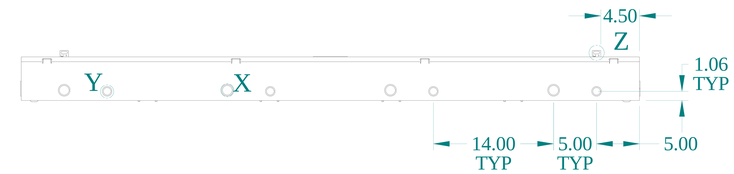


BACK VIEW

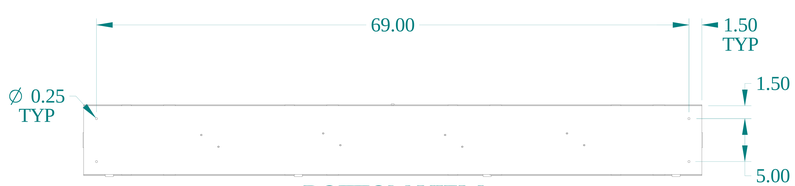


BOTTOM VIEW

DETAIL W
TYP

DETAIL Y
TYP

DETAIL X
TYP

HAMMOND MANUFACTURING®

www.hammondmfg.com

Data subject to change without notice.

| | |
|---|---|
| Part # : CST6104 | Date : Nov. 4, 2020 |

Link:www.hammfg.com/CST6104