TOP VIEW

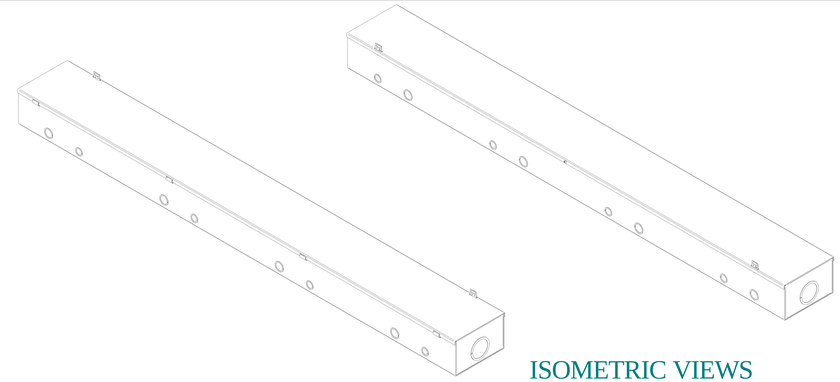

ISOMETRIC VIEWS

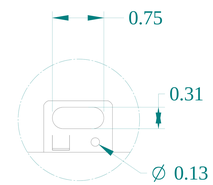

DETAIL Z
TYP

SECTION V-V

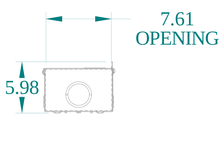

SIDE VIEW

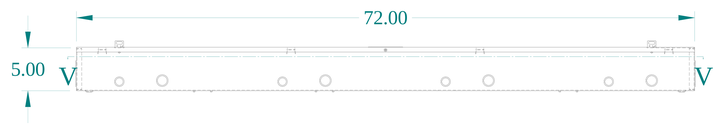

FRONT VIEW

SIDE VIEW

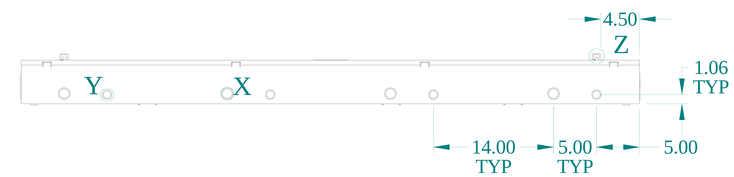

BACK VIEW

DETAIL W
TYP

DETAIL Y
TYP

DETAIL X
TYP

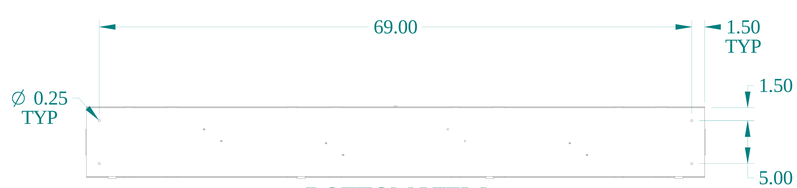

BOTTOM VIEW

HAMMOND MANUFACTURING®

www.hammondmfg.com

Data subject to change without notice.

Part # : CST6203	Date : Nov. 4, 2020

Link:www.hammfg.com/CST6203