1257-I

Color: Ivory

UPC Code: 07847716575

Country of Origin: Mexico - **Eligible for ARRA funded projects > $7,443,000*

Switches

Brand Features

Leviton's Industrial Grade AC toggle switches for extra heavy-duty applications represent top-of-the-line quality and peak performance. Leviton uses the finest materials available and the highest production standards to produce industrial switches of unmatched versatility and reliability.

Item Description

20 Amp, 120/277 Volt, Toggle Double-Throw Ctr-OFF Momentary Contact Single-Pole AC Quiet Switch, Extra Heavy Duty Spec Grade, Grounding, Back & Side Wired, - Ivory

Technical Information

AC Horsepower Ratings

HP Rating: 1HP-120V 2HP-240V

Max. Amperage: 16 Amp

Electrical Specifications

Amperage: 20 Amp

Voltage: 120/277 VAC

Grounding: Self-Grounding

Dielectric Voltage: Withstands 1500V for 1 minute

Overload UL20 Test: 100 cycles of OL at 4.8 times rated current

Temperature Rise: Maximum 30 degrees C rise

Endurance: 50,000 cycles minimum

Environmental Specifications

Flammability: Rated V-2 per UL94

Operating Temperature: -40ºC to 65ºC

Material Specifications

Strap Material: .048" Thick Galvanized Steel

Base Material: Thermoplastic

Toggle: Polycarbonate

Cover Material: Thermoplastic

Contact Material: Silver Alloy

Terminal Screws: Brass 8-32

Grounding Screw: Brass 8-32

Ground Clips: Brass

Color: Ivory

Mechanical Specifications

Terminal ID: Brass-Hot Black-Hot White-Neutral Green-Gnd

Terminal Accom.: 14-#10 AWG back wired; #14-#12 AWG side wired

Product ID: Ratings are permanently marked on device

Torque Range: 12-14 inch pounds

Product Features

Color: Ivory

Grounding: Grounding

Feature: Double-Throw Ctr-OFF Momentary Contact

Voltage: 120/277 Volt

HP Rating: 1HP-120V 2HP-240V-277V

Body Material: Thermoplastic

Strap Material: Steel

Standards and Certifications

NEMA: WD-1 & WD-6

ANSI: C-73

UL Fed Spec WS896E: File #E7458

UL Standard: UL 20

CSA C22.2 No. 111: File #152105

NOM: 057

RoHS: Compliant

Warranty: 10 Year Limited

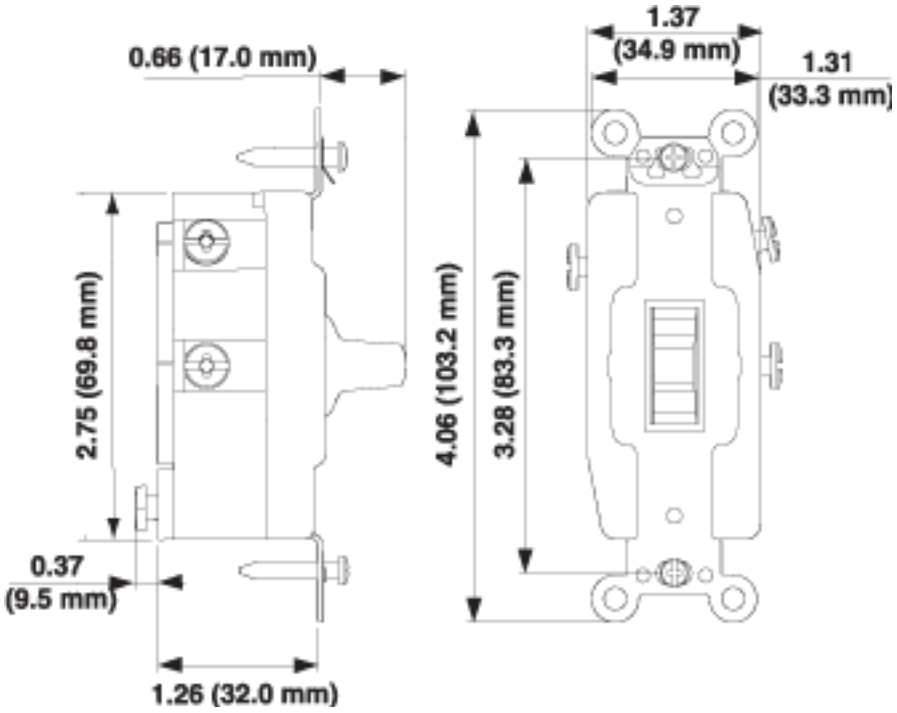

Wiring Diagram

Single-Pole, Double Throw (SPDT) Center OFF

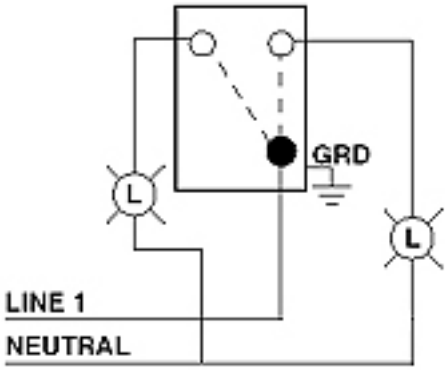

SPECIFICATION SUBMITTAL

JOB NAME:	CATALOG NUMBERS:	
JOB NUMBER:		

Leviton Manufacturing Co., Inc.
201 North Service Road, Melville, NY 11747
Telephone: 1-800-323-8920 · FAX: 1-800-832-9538 · Tech Line (8:30AM-7:30PM E.S.T. Monday-Friday): 1-800-824-3005

Leviton Manufacturing of Canada, Ltd.
165 Hymus Boulevard, Pointe Claire, Quebec H9R 1E9 · Telephone: 1-800-469-7890 ·
FAX: 1-800-824-3005 · www.leviton.com/canada

Leviton S. de R.L. de C.V.
Lago Tana 43, Mexico DF, Mexico CP 11290 · Tel.: (+52)55-5082-1040 · FAX: (+52)5386-1797 · www.leviton.com.mx

Visit our Website at: www.leviton.com
© 2012-2013 Leviton Manufacturing Co., Inc. All rights reserved. Subject to change without notice.

Leviton has a global presence.
If you would like to know where your local Leviton office is located please go to: www.leviton.com/international/contacts/

**Buy American Compliant Logo -- The American Recovery And Reinvestment Act of 2009 ("ARRA") provides federal grants and loans for projects throughout the country. Section 1605 of the Act, named the "Buy American" provision, requires that certain materials and manufactured products used in projects funded by the Act be manufactured in the United States. The appearance of the Recovery Act Logo in relation to a Leviton product is only intended to reflect that such product may be used in an ARRA funded project. It does not mean that such product or Leviton is sponsored or endorsed by, or that Leviton receives funds from, the federal government or the Recovery Accountability and Transparency Board. Nothing in Leviton's use of the logo is intended to suggest anything regarding the requirements for funding under ARRA.*