EXTERNAL SENSORS MUTING ARMS: SG-M

Modular, ready-to-use muting sensor kit for flexible installation

The SG-M muting sensors kit regulates the position and orientation of muting beams in order to adapt quickly and easily to any kind of situation.

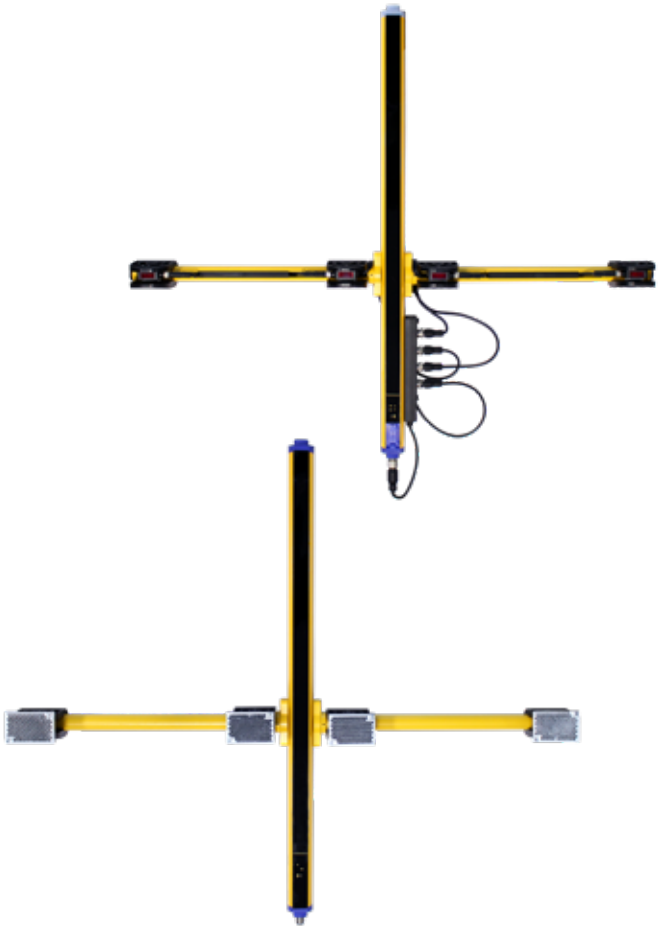

APPLICATIONS

- Palletizers / Depalletizers
- Conveyor lines

INDUSTRIES

- Material Handling
- Food & Beverage
- Metal working
- Automotive
- Wood
- Ceramics

CE

c UL US LISTED

SG-ML-S8-200-L

MUTING CONFIGURATION	
L	L configuration: 2 sensors, 2 reflectors. Parallel beams. Monodirectional (Exit only).
T	T configuration: 4 sensors, 4 reflectors. Parallel beams. Bidirectional.
X	X configuration: 2 sensors, 2 reflectors. Crossed beams. Bidirectional.

MUTING SENSOR	
S8	2 x S8-PR-5-B01-PP
S100	2 x S100-PR-5-B10-PK

CABLE LENGTH	
---	700 mm
200	2000 mm

ARM ORIENTATION	
L	Left: the muting arm is to the left, looking at light curtain receiver
R	Right: muting arm is to the right, looking at light curtain receiver

A flexible solution for muting

In some access guarding applications, like in palletizing/depallitizing machines, safety light curtains are muted while a load passes through their monitored area.
When the load has an irregular shape, or has holes in it, muting can end before the load has completely passed the light curtain, causing the unnecessary stop of the machine. In cases like this, the ability to regulate the position and orientation the position and orientation of muting beams with increased flexibility, allows the system to adapt quickly and easily to any kind of situation.
To simplify the installation of muting sensors in these kind of applications, Datalogic has developed the new SG-M muting sensors modular Kits. The SG-M includes retroreflective photocells as muting sensors, reflectors, cylindrical metallic arms, orientable plastic brackets, cables with M12 connectors, and a connection box for the quick wiring of the sensor outputs to the safety light curtain dedicated muting connector.
The SG-M is the newest addition to a safety portfolio that includes integrated muting arms (SG-T-ARM and SG-L-ARM).

The arms with external sensors can be attached directly to the light curtains of SG Series (fig. 1) or to their protective stands SG-PSB (fig. 2).
With SG-M, three standard configurations for muting beams can be easily installed: T Muting (fig.3), L Muting (fig. 4 and 5) and X Muting (fig. 6).
Sensors provided with the kit are retroreflective, dark on photocells, and come in two versions:
- S100-PR-5-B10-PK, for standard applications with no specific requirements
- S8-PR-5-B01-PP for applications where beam intensity reulation is required.

On the opposite side of the sensors, an ù reflector is mounted.
Sensors and reflectors can be positioned along the arms and orientated both horizontally and vertically thanks to their brackets shape.
Sensors have detachable cables (in T and L muting kits) or pigtails. Both cables have an M12 connector M12 connector, for a quick connection to the safety light curtains through a dedicated connection box (SG-M-CB), or to an external safety controller through normal cables.
The cables are protected inside the metallic arms and have different lengths (700 and 2000 mm), for easy installation on the light curtains, or on the protective stands.

Fig. 1

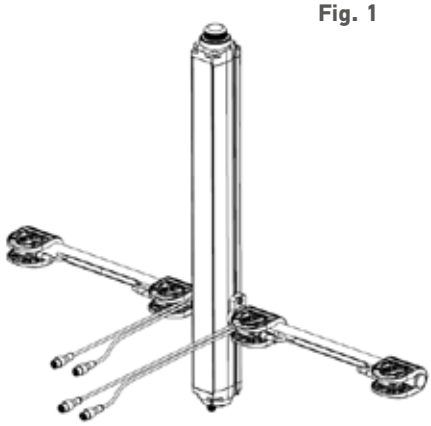

Muting arms attached on the light curtain

Fig. 2

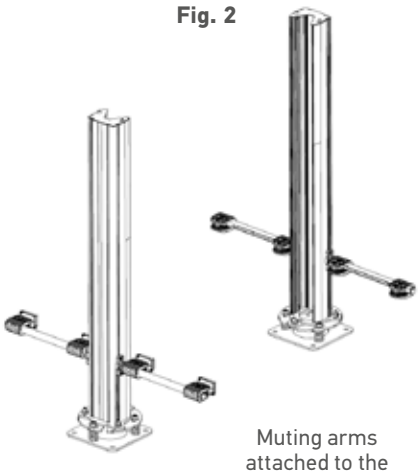

Muting arms attached to the protective stands

Fig. 3

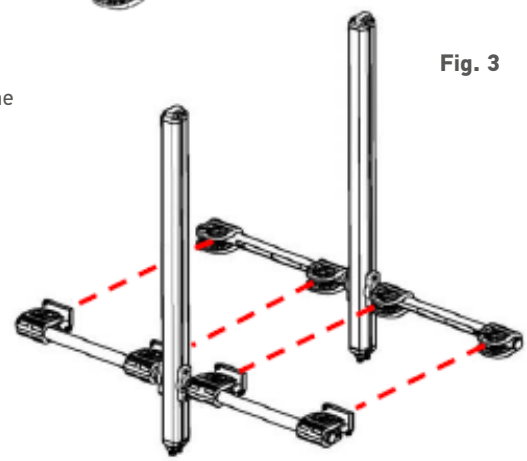

T muting configuration

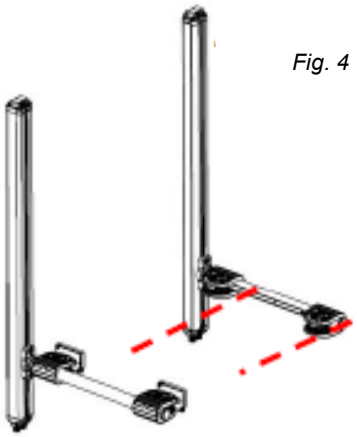

Fig. 4

L muting configuration with orientation to the right.

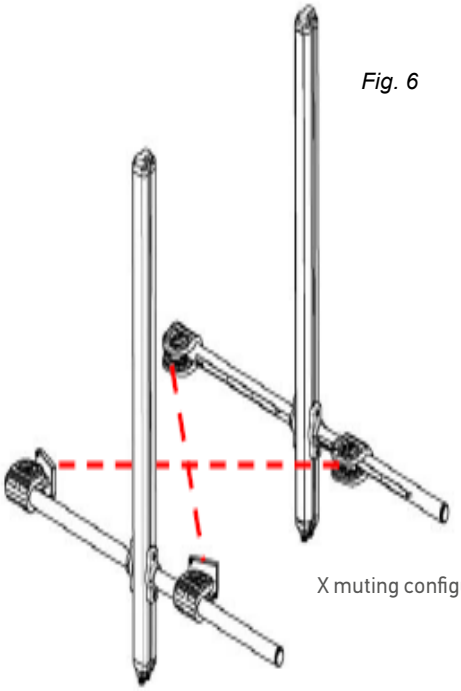

Fig. 6

X muting configuration

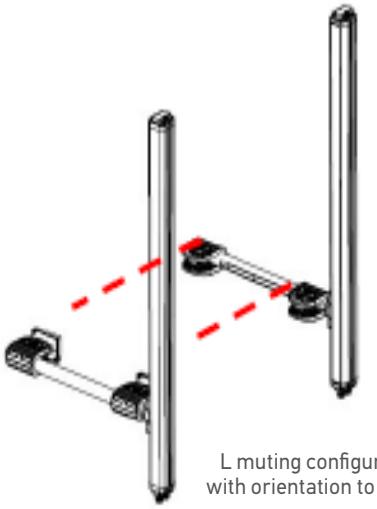

Fig. 5

L muting configuration with orientation to the left

SG-M MUTING KITS

The following table shows the characteristics, the sensors and the cables included in any SG-M muting configuraion kit in addition to the mechanical parts (arms and brackets) necessary to connect them to the profiles of the SG family safety light curtains.

MUTING CONFIGURATION	MODEL	DIRECTION *1	SENSOR ADJUSTMENT TRIMMER	MIN/MAX DISTANCE *4	SENSORS *2	CABLES *3	ORDER NUMBER
L Muting	SG-ML-S100-L	left side	No	0.2 ... 3 m	2 x S100-PR-5-B10-PK	2 x CS-M1-02-B-007 (700 mm)	95ASE2620
	SG-ML-S100-R	right side	No	0.2 ... 3 m	2 x S100-PR-5-B10-PK	2 x CS-M1-02-B-007 (700 mm)	95ASE2430
	SG-ML-S100-200-L	left side	No	0.2 ... 3 m	2 x S100-PR-5-B10-PK	2 x CS-M1-02-B-02 (2000 mm)	95ASE2610
	SG-ML-S100-200-R	right side	No	0.2 ... 3 m	2 x S100-PR-5-B10-PK	2 x CS-M1-02-B-02 (2000 mm)	95ASE2400
	SG-ML-S8-L	left side	Yes	0.2 ... 3 m	2 x S8-PR-5-B01-PP	2 x CS-M1-02-B-007 (700 mm)	95ASE2600
	SG-ML-S8-R	right side	Yes	0.2 ... 3 m	2 x S8-PR-5-B01-PP	2 x CS-M1-02-B-007 (700 mm)	95ASE2370
	SG-ML-S8-200-L	left side	Yes	0.2 ... 3 m	2 x S8-PR-5-B01-PP	2 x CS-M1-02-B-02 (2000 mm)	95ASE2590
	SG-ML-S8-200-R	right side	Yes	0.2 ... 3 m	2 x S8-PR-5-B01-PP	2 x CS-M1-02-B-02 (2000 mm)	95ASE2340
T Muting	SG-MT-S100		No	0.2 ... 3 m	4 x S100-PR-5-B10-PK	4 x CS-M1-02-B-007 (700 mm)	95ASE2440
	SG-MT-S100-200		No	0.2 ... 3 m	4 x S100-PR-5-B10-PK	4 x CS-M1-02-B-02 (2000 mm)	95ASE2410
	SG-MT-S8		Yes	0.2 ... 3 m	4 x S8-PR-5-B01-PP	4 x CS-M1-02-B-007 (700 mm)	95ASE2380
	SG-MT-S8-200		Yes	0.2 ... 3 m	4 x S8-PR-5-B01-PP	4 x CS-M1-02-B-02 (2000 mm)	95ASE2350
X Muting	SG-MX-S100		No	0.45 ... 3 m	2 x S100-PR-2-B10-PK SV4973	pigtail 700 mm	95ASE2450
	SG-MX-S100-200		No	0.45 ... 3 m	2 x S100-PR-2-B10-PK SV4974	pigtail 2000 mm	95ASE2420
	SG-MX-S8		Yes	0.6 ... 3 m	2 x S8-PR-5-B01-PP SV4973	pigtail 700 mm	95ASE2390
	SG-MX-S8-200		Yes	0.6 ... 3 m	2 x S8-PR-5-B01-PP SV4974	pigtail 2000 mm	95ASE2360

NOTE

*1 "Left side" and "Right side", related to L muting kits, refers to the position of the arm looking towards the receiver of the light curtain.
"Left side" and "Right side" kits differ only mechanically, in order to keep the regulating screws upside.
*2 In X Muting Kits, special versions of photocells with pigtails and M12 connectors have been used.
*3 Cables used in T and L muting kits have M8 connectors on the sensors side, and M12 connectors at the external side.
*4 Minimum distance of 0.2 m is determined by the light curtain. Maximum distance of 3 m is to avoid interferences between muting sensors

COMPATIBILITY

SG BODY COMPACT MUTING
SG BODY BIG MUTING
SG BODY REFLECTOR MUTING
SG2 MUTING
SG4 EXTENDED
SG-PSB (only models with 2000 mm cables (SG-Mx-xxx-200-x)