SLIM

DATALOGIC

Highest mechanical flexibility for a perfect fit into machine structures
Simple commissioning and maintenance
High functional performance

- SLIM profile: 15 x 32 mm
- Pigtail cable with 5-pole M12 connectors
- Same cable for Emitter and Receiver
- No Dead Zone
- 14, 24 and 34 mm resolution
- 34 different protection lengths, with 30 mm modularity
- 3 different brackets shapes
- Cascadable up to 3 units
- Auto/Manual restart and EDM function configuration by wiring
- LED display messages diagnosis

APPLICATIONS

- Primary packaging machinery (packing, filling, labelling, etc...)
- Cutting machinery
- Automatic assembly machines and lines
- Automatic and semi-automatic quality inspection machinery
- Material handling machinery
- Bending and metal-working machinery
- Process lines

INDUSTRIES

- Food & Beverage
- Electronics
- Automotive
- Metal working

	FINGER	HAND	ARM	BODY
Type 2	x	x		
Type 4	x	x		

SL2-14-0150-E

TYPE	
2	Type 2
4	Type 4

RESOLUTION	
14	Finger : 14 mm
24	Hand: 24 mm
34	Hand: 34 mm

MONITORED HEIGHT	
0150	150 mm
0210	210 mm
0270	270 mm
0300	300 mm
...	
1200	1200 mm

VERSION	
E	EDM, Restart

TECHNICAL DATA

	SL2 [SL2-xx-xxxx-E]	SL4 [SL4-xx-xxx-E]
	GENERAL DATA	
Type (EN61496-1)	2	4
PL (EN ISO 13849-1)	c	e
SIL (IEC 61508)	1	3
Resolution	14 - 24 - 34 mm	
Protected heights	150 210 270 ... 1200 (with 30 mm steps)	
Operating distance	0.2 ...6 m	
	ELECTRICAL DATA	
Power supply (Vdd)	24 Vdc ± 20%	
Outputs	2 PNP	
Output current	0.3 A max / each output	
Capacitive load	1 uF @ 24Vdc max	
Response time*	RT = 7 ... 17 ms (14 mm resolution) RT = 7 ... 13 ms (24 mm resolution) RT = 7 ... 15 ms (34 mm resolution) Cascade Response time (up to 3 units) <= 20ms	
Cables length (for power supply)	20 m max	
	MECHANICAL AND ENVIRONMENTAL DATA	
Operating temperature	-10 ...+55 °C	
Storage temperature	-25° ... 70°C	
Humidity	15 ... 95 % (no condensation)	
Mechanical protection	IP65 (EN 60529)	
Housing material	Painted Aluminium, Painted Zamak	
Window material	PMMA	
	FUNCTIONS	
	Manual/Automatic restart	
	External Device Monitoring (EDM)	
	Alignment mode	

NOTE

* Response time is dependent on height: for more details refer to product manual

DIMENSIONS

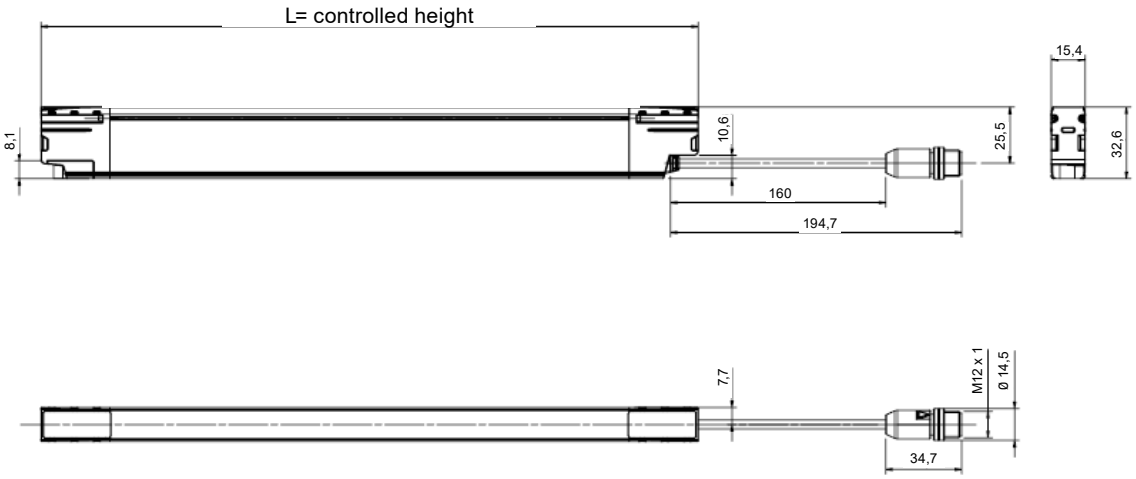

MODEL	L (mm)
SLx-yy-0150-E	150
SLx-yy-0210-E	210
SLx-yy-0270-E	270
SLx-yy-0300-E	300
SLx-yy-0330-E	330
SLx-yy-0360-E	360
SLx-yy-0390-E	390
SLx-yy-0420-E	420
SLx-yy-0450-E	450
SLx-yy-0480-E	480
SLx-yy-0510-E	510
SLx-yy-0540-E	540
SLx-yy-0570-E	570
SLx-yy-0600-E	600
SLx-yy-0630-E	630
SLx-yy-0660-E	660
SLx-yy-0690-E	690
SLx-yy-0720-E	720
SLx-yy-0750-E	750
SLx-yy-0780-E	780
SLx-yy-0810-E	810
SLx-yy-0840-E	840
SLx-yy-0870-E	870
SLx-yy-0900-E	900
SLx-yy-0930-E	930
SLx-yy-0960-E	960
SLx-yy-0990-E	990
SLx-yy-1020-E	1020
SLx-yy-1050-E	1050
SLx-yy-1080-E	1080
SLx-yy-1110-E	1110
SLx-yy-1140-E	1140
SLx-yy-1170-E	1170
SLx-yy-1200-E	1200

ACCESSORIES SELECTION AND ORDER INFORMATION

BRACKETS		ORDER NUMBER
C-shaped Brackets (included): 2 pcs kit	ST-K2-SL-C	95ASE2510
O-shaped Brackets (included): 4 pcs kit	ST-K4-SL-O	95ASE2520
L-shaped Bracktets: 2 pcs kit	ST-K2-SL-L	95ASE2540
C-shaped Orientable Brackets: 2 pcs kit	ST-K2-SL-C-OR	95ASE2530
MIRRORS		
Deviating Mirrors	SG-DM Series	See NOTE 1
Deviating Mirrors mounting kit for SG-PSB	ST-PS-DM	See NOTE 1
Mirror Mounting Bracket	ST-DM	See NOTE 1
SAFETY UNITS		
Safety Unit	SE-SR2	95ACC6170
EDM Relay Box**	CS-ME	95ASE1270
Safety control unit for single beams and SLC (with muting)	SG-BWS-T4-MT	957051010
TEST PIECES		
Test Piece 14mm L=300mm	TP-14	95ACC1630
Test Piece 24mm L=200mm	TP-24	95ASE2570
Test Piece 34mm L=200mm	TP-34	95ASE2580
NOTES		

NOTE 1 : For order numbers of these accessories refer to SAFETY REFERENCE GUIDE or to datasheets of SG-DM accessories
NOTE 2: When using EDM Relay Box or Muting connection box, connect EDM input, and be sure EDM function is active on the safety light curtain

BRACKETS

C-shaped bracket

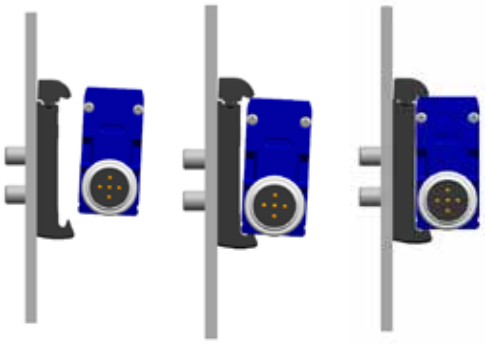

C-shaped brackets fixing

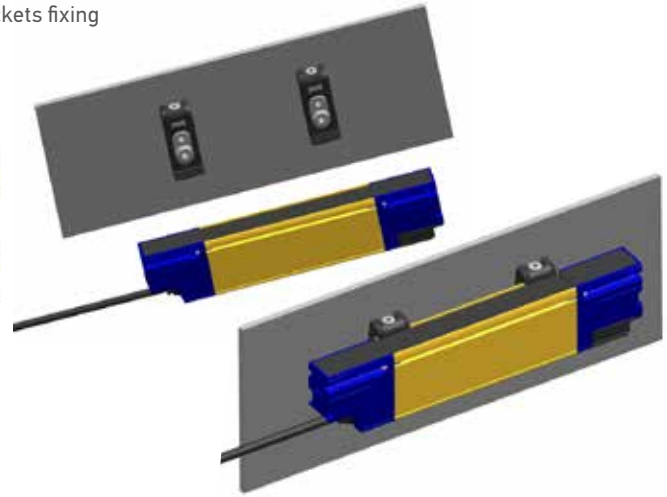

O -shaped bracket

O -shaped brackets fixing

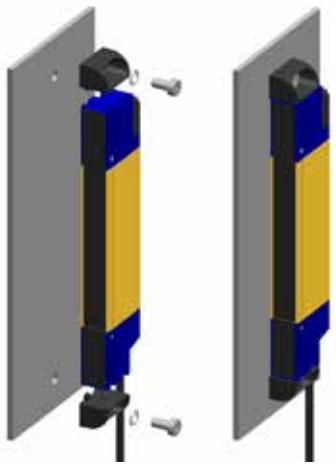

L - shaped bracket
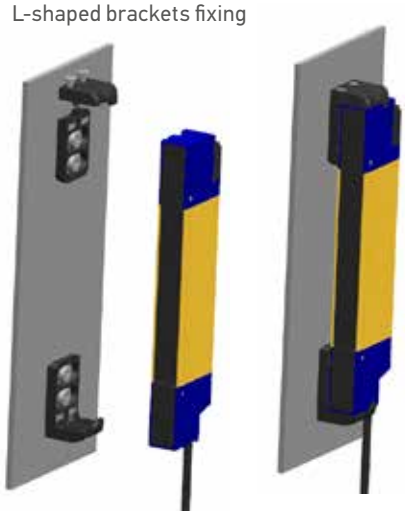
L-shaped brackets fixing