Honeywell

MP909E and H Pneumatic Damper Actuators

SPECIFICATION DATA

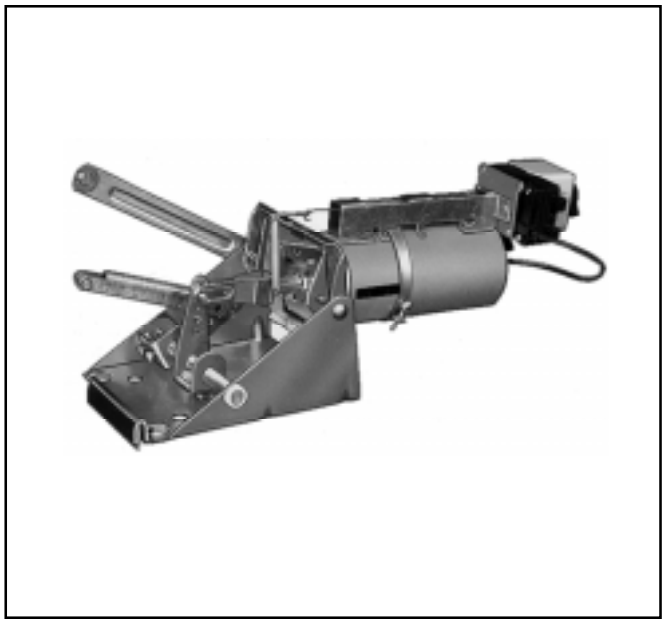

FEATURES

- **Low friction shaft bearing**
- **Close tolerance on operating range and stroke**
- **Versatile mounting and connecting hardware**
- **Cost efficient mounting to Honeywell dampers**
- **Nonoverlapping spring ranges for sequencing**
- **Corrosion resistant materials**
- **Reliable—long life**
- **Models available for use with UL classified leakage rated (smoke) dampers**

GENERAL

The MP909E and H Pneumatic Damper Actuators control dampers, variable volume terminal units, and mixing boxes. The MP909H is an MP909E with a positive positioner.

Copyright © 1996 Honeywell Inc. • All Rights Reserved

SPECIFICATIONS

Models:
❑ MP909E Actuator without positioner
❑ MP909H Actuator with positioner

Maximum Safe Air Pressure:
MP909E: 29 psi (200 kPa)
MP909H: 25 psi (172 kPa), limited by positioner

Operating Range:
MP909E: See following table
MP909H: Span of 3, 5, or 10 psi (21, 34, or 69 kPa), nonadjustable. Provided with 10 psi feedback spring; 5 psi feedback spring included; 3 psi feedback spring available

Net Force Exerted:

Model	Operating Range psi (kPa)	Stroke in. (mm)	Net Force in Pounds (N) Exerted at Various Pressures		
			0 psi (0 kPa)	18 psi (124 kPa)	20 psi (140 kPa)
MP909E	3-13 (21-90) 5-10 (34-69)	4.0 (100)	19.8 (88) 33 (147)	33 (147) 53 (236)	46.2 (206) 66 (294)
	2.5-6.5 (17-45) 5-10 (34-69) 9-13 (62-90)	3.1 (80)	16.5 (73) 33 (147) 59.4 (264)	76 (338) 53 (236) 33 (147)	89 (396) 66 (294) 46.2 (206)
MP909H	All spans [1]	4.0 (100)	33 (147)	53 (236)	66 (294)

[1] MP909H has 5-10 psi (34-69 kPa) operating spring range.

Air Connections:
MP909E: Combination 5/32-in. (4 mm) and 1/4-in. (6 mm) push-on barb
MP909H:
- Positioner: 5/32-in. (4 mm) push-on barb (pilot), 1/4-in. 6 mm) push-on barb (main and branch)
- Actuator: combination 5/32-in (44 mm) and 1/4-in. (6 mm) push-on barb
- UL listed actuators: Special high temperature plastic tubing pigtails that allow connection to 1/4-in. (6 mm) O.D. copper tubing

Diaphragm:
Neoprene, rolling type
Effective area 6.6 in^2 (40 cm^2)

Body Material and Finish:
Corrosion resistant aluminum alloy

Air Consumption:
MP909E: Zero
MP909H: 0.021 scfm (9.9 ml/sec)

Startpoint Pressure (MP909H):
Adjustable 1.5 to 13 psi (10.3 to 90 kPa)

Ambient Temperature Range:
MP909E: -28 to 160F (-33 to 70C)
MP909H: -20 to 160F (-29 to 70C), limited by positioner

Mounting:
Trunnion and right angle bracket

Dimensions:

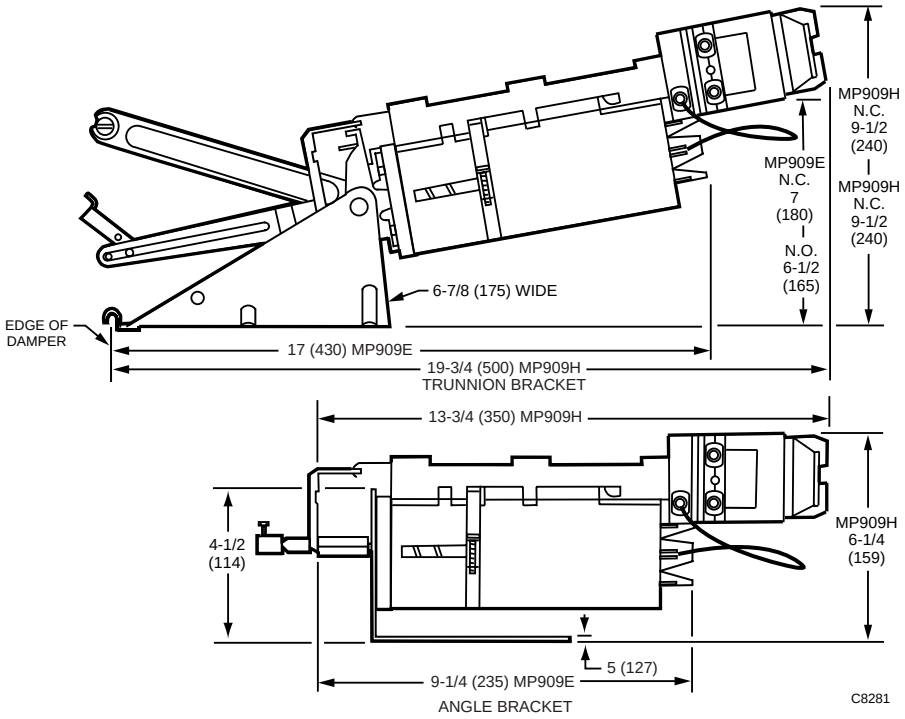

UL Listed:

Models Available: MP909E: 5 to 10 psi (34 to 69 kPa)

UL Restrictions: UL listing applies only when used with UL classified Honeywell SD series leakage rated dampers

Mainline Pressure Limits: 15 psi (103 kPa) minimum; 25 psi (172 kPa) maximum

Damper Limitations:

D640SD, D641SD: See 77-5129

D644SD, D645SD: See 77-5140

Accessories:

- ❏ Feedback spring kit for 3 psi span (MP909H): 14004509-001 (10 springs per kit)
- ❏ Positioner Kit to convert MP909E 5 to 10 psi to MP909H (includes 3, 5, and 10 psi feedback spring): 14004137-001

EXAMPLE:

Damper Model: D641

Duct Dimension: 62 inches

(A dimension) x 20 inches

(B dimension)Actuator: MP909E

Operating Range: 5 to 10 psi (34 to 69 kPa)

Type of Operation: Modulating Service

Main Air Pressure: 13 psi (90 kPa)

The 62-inch A dimension requires two damper sections (48 inches maximum per section). Multiplying the B dimension (20 inches) by two equals 40 inches of total B dimension. The Maximum Damper Load Rating Table shows that one MP909E can operate up to 33 inches of damper. Two MP909Es are required in this example.
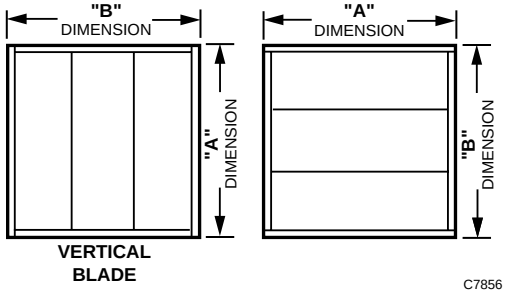
Damper A and B Dimensions