Straight Blade Devices
Accessories
Wallplates

HUBBELL

Features
- Captive screw holds mounting screw in place
- Pre-inserted captive screws for faster assembly

Ordering Information

Description	Device Color	UPC	Catalog Number
Nylon, 1-Gang, Single 1.40" Opening, White	White	883778103537	NP7W

Listings
UL Standard 514D
UL Files #E31999, E92074
CSA Standard C22.2 No. 42.1

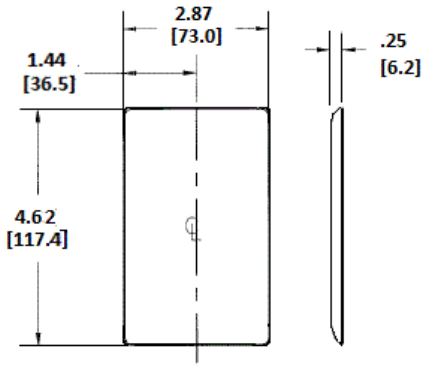

Specifications

Size	1-Gang
Height	4.63" (117.6)
Width	2.88" (73.2)
Thickness	.06 in. (1.5).
Mounting Screw	Steel

Resources
Customer Use Drawing
eCatalog

Performance

Environmental

Appearance	Smooth
Operating Temperature	-40°C to 85°C

Dimensions in Inches (mm)

Hubbell Wiring Device-Kellems • Hubbell Incorporated (Delaware) • 40 Waterview Drive • Shelton, CT 06484
Phone (800) 288-6000 • Fax (800) 255-1031 • Specifications subject to change without notice.

HUBBELL®
Wiring Device-Kellems