Cable Management

Horizontal Cable Manager

S-Series Rail Mounted

HUBBELL

Features

- Cable fingers align with patch panel adaptors to prevent patch cord kinks
- Steel construction provides ample strength for heavy cable loading
- Door is removeable to allow for easy addition of patch cords

Ordering Information

Rack Units	Depth	Catalog Number	UPC
2 RU	3"	HS23C	662620249834

Listings

EIA/ECA-310-E Universal Mounting Pattern

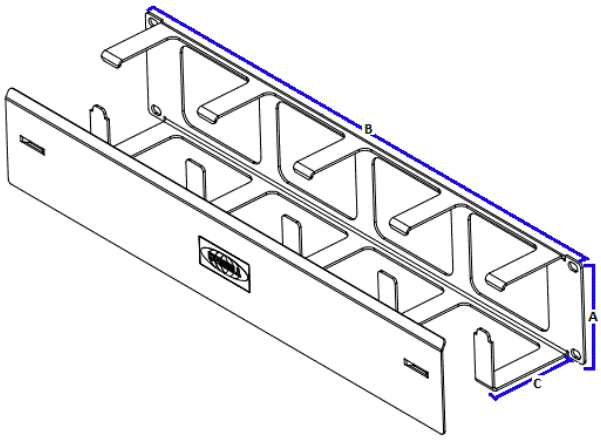

Specifications

Material	Steel
Gauge	14
Finish	Black Powder Coated

Characteristics

Cover	Included, Lift off
Pass through holes	Standard
Corresponding Vertical Cbl Mgr	VS Series

Accessories

Replacement Cover, 2U	**HS2C**
Black Velcro Roll	**HVFBK575**
9" Velco Strips, Yellow	**MCCMV9YL10**

Dimensions- inches (mm)

A	2 RU, 3.5" (89)
B	19" (483)
C	3" (76)

Online Resources

Customer Drawings
eCatalog