Lytecaster Recessed Downlighting

394X

19-Dec-11

Adjustable Cone

Ceiling Opening: 3-3/4" (95mm)

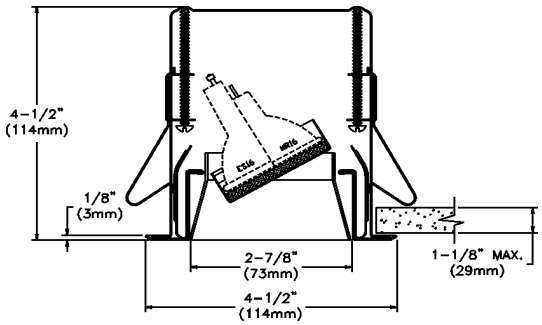

Complete fixture consists of the Trim and Frame-in Kit. Select each separately.

Reflector Trim		Frame-in Kit (Low Voltage)		Lamp	Voltage
394CHX	Chrome reflector and white flange	Remodeler Non-IC	300MRSPX	50W MR16 / 37W MR16 IR	120V
		Remodeler Non-IC	3401MREX	50W MR16 / 37W MR16 IR	120V
		Frame Non-IC	302MRLX	50W MR16 / 37W MR16 IR	120V
		Frame Non-IC	302MRSPX	50W MR16 / 37W MR16 IR	120V
		Frame Non-IC	302MREX	50W MR16 / 37W MR16 IR	120V
		Frame IC	302MRIC7SPX	50W MR16 / 37W MR16 IR	120V
		Frame IC	302MRIC9SPX	50W MR16 / 37W MR16 IR	120V
		Lytening Frame AirSeal®	302MRAICSPX	50W MR16 / 37W MR16 IR	120V
		Lytening Frame AirSeal®	302MRAICEX	50W MR16 / 37W MR16 IR	120V
		Frame-in Kit (Line Voltage)		**Lamp**	**Voltage**
		Remodeler Non-IC	300ESX	50W ES/ESD16 (GU10)	120V
		Frame Non-IC	302ESX	50W ES/ESD16 (GU10)	120V
		Frame IC	302ESICX	50W ES/ESD16 (GU10)	120V
		Lytening Frame AirSeal®	302ESAICX	50W ES/ESD16 (GU10)	120V
		Frame-in Kit (HID)		**Lamp**	**Voltage**
		Remodeler Non-IC	3401MH39MRE1	39W MR16 (GX10) CMH	120V

Features

Housing: 25 ga galvanized steel.
Residence Mounting Clips: Factory-installed; zinc plated spring steel; free-hand installation.
Flange Housing: Cold rolled steel 22ga.
Cone: 18ga aluminum. Chrome finish.
Adjustable Lampholder Support: 27 ga. Steel. rotates 358° horizontally and 0° to 35° vertically.
Mounting Clips (2): 24 ga. spring steel, zinc plated. Provides easy snap-in / snap-out action.
Lamp Guard: 2" (51mm) dia. clear soda lime glass.

Accessories

2" (51mm) dia. Glass Colour Filters: See ADF2 Specification Sheet.
2" (51mm) dia. Specialized Filters: See AF2 Specification Sheet.
Square Faceplates

300SQBK	Black
300SQWH	White

Frame-in Kit

See Frame-In Kit specification sheets for more details.

Marking

cCSAus Certified, suitable for damp locations.

Job Information **Type:**

Job Name:
Cat. No.:
Lamp(s):
Notes:

Canlyte www.canlyte.com
3015 Louis-Amos, Lachine, Québec H8T 1C4 • (514) 636-0670 • (514) 636-0460

PHILIPS LIGHTOLIER

Éclairage Encastré Lytecaster

394X

19-Dec-11

Cône à base orientable

Ouverture du plafond : 3-3/4 po (95mm)

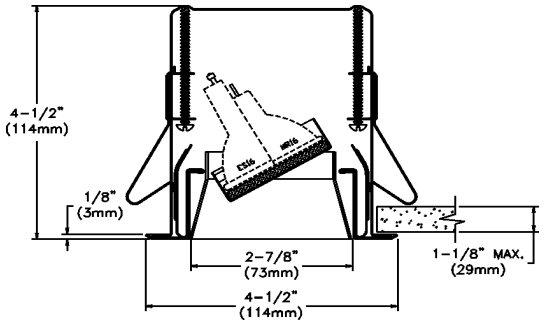

Le luminaire complet comprend la garniture et le cadre de montage : choisir chacun séparément.

Garniture du Réflecteur		Cadre de montage (Basse tension)		Lampe	Voltage
394CHX	Réflecteur chrome et bordure blanche	Rénovation Non-IC	300MRSPX	50W MR16 / 37W MR16 IR	120V
		Rénovation Non-IC	3401MREX	50W MR16 / 37W MR16 IR	120V
		Cadre Non-IC	302MRLX	50W MR16 / 37W MR16 IR	120V
		Cadre Non-IC	302MRSPX	50W MR16 / 37W MR16 IR	120V
		Cadre Non-IC	302MREX	50W MR16 / 37W MR16 IR	120V
		Cadre IC	302MRIC7SPX	50W MR16 / 37W MR16 IR	120V
		Cadre IC	302MRIC9SPX	50W MR16 / 37W MR16 IR	120V
		Lytening Cadre AirSeal®	302MRAICSPX	50W MR16 / 37W MR16 IR	120V
		Lytening Cadre AirSeal®	302MRAICEX	50W MR16 / 37W MR16 IR	120V
		Cadre de montage (Courant direct)		**Lampe**	**Voltage**
		Rénovation Non-IC	300ESX	50W ES/ESD16 (GU10)	120V
		Cadre Non-IC	302ESX	50W ES/ESD16 (GU10)	120V
		Cadre IC	302ESICX	50W ES/ESD16 (GU10)	120V
		Lytening Cadre AirSeal®	302ESAICX	50W ES/ESD16 (GU10)	120V
		Cadre de montage (DHI)		**Lampe**	**Voltage**
		Rénovation Non-IC	3401MH39MRE1	39W MR16 (GX10) CMH	120V

Description

Boîtier : en acier galvanizé de calibre 25ga.
Attaches de montage Résidence : pré-assemblé en usine. Ressort en acier plaqué zinc. Le luminaire tient en place dans le plafond sans besoin de le retenir pendant l'ajustement.
Boîtier à bordure : en acier de calibre 22.
Cône : en aluminium de calibre 18. Fini chrome.
Support du boîtier de lampe réglable : en acier de calibre 27 ga. Pivote 358° à l'horizontale et 0° à 35° à la verticale.
Attaches de montage (2) : **ressort en acier** inoxydable de calibre 24. Facile à enlever et à remettre en place.
Lentille de protection : verre clair sodocalcique de 2 po (51mm) de diamètre.

Accessoires

Filtres colorés en verre de 2 po (51mm) dia. : voir la feuille de spécification ADF2.
Filtres spécialisées de 2 po (51mm) dia. : voir les feuilles de spécification AF2.
Plaques de montages carrées

300SQBK	Noir
300SQWH	Blanc

Cadre de Montage

Pour les caractéristiques des cadres de montage, voir les fiches techniques appropriées.

Marquage

Certifié cCSAus ; convient aux emplacements humides.

Information Projet **Type:**

Nom Projet:

No. Cat.:

Lampe(s):

Notes:

Canlyte www.canlyte.com
3015 Louis-Amos, Lachine, Québec H8T 1C4 • (514) 636-0670 • (514) 636-0460

PHILIPS LIGHTOLIER®

(FC) is initial footcandles at center of beam.
Beam length **(L)** and beam width **(W)** are to where the candlepower is reduced to 50% of center beam candlepower.
CBCP is center beam candlepower.
(C) is distance to the center of the beam.

Lamp data shown is typical, and is based on bare lamp photometrics. Contact lamp manufacturers for availability and performance.

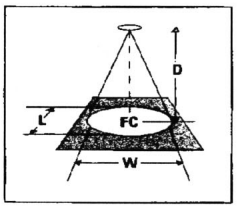

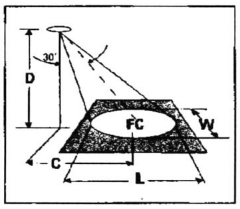

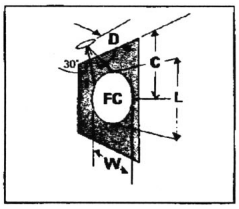

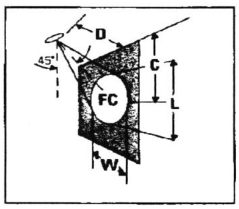

Lamps	Beam Spread (To 50% CBCP)	CBCP	Rated Life (Hrs.)	0° AIMING ANGLE D	FC	L	W	30° AIMING ANGLE D	C	FC	L	W	30° AIMING ANGLE D	C	FC	L	W	45° AIMING ANGLE D	C	FC	L	W
MR-16 LOW VOLTAGE HALOGEN BI-PIN LAMPS																						
20W MR-16 VNSP (EZX)	7°	8200	3000	7'	167	0.9'	0.9'	6'	3.5'	148	1.0'	0.8'	2'	3.5	256	1.0'	0.5'	4'	4.0'	181	1.0	0.7'
				10'	82	1.2'	1.2'	9'	5.2'	66	1.5'	1.3'	3'	5.2'	114	1.5'	0.7'	6'	6.0'	81	1.5	1.0'
				13'	49	1.6'	1.6'	12'	6.9'	37	2.0'	1.7'	4'	6.9'	64	2.0'	1.0'	8'	8.0'	45	2.0	1.4'
				16'	32	2.0'	2.0'	15'	8.7'	24	2.3'	2.1'	5'	8.7'	41	2.5'	1.2'	10'	10.0'	29	2.5	1.7'
20W MR-16 NSP (ESX)	13°	3600	3000	6'	100	1.4'	1.4'	5'	2.9'	94	1.5'	1.3'	2'	3.5'	113	1.9'	0.9'	3'	3.0	141	1.4'	1.0'
				8'	56	1.8'	1.8'	7'	4.0'	48	2.1'	1.8'	3'	5.2'	50	2.8'	1.4'	5'	5.0	51	2.3'	1.6'
				10'	36	2.3'	2.3'	9'	5.2'	29	2.7'	2.4'	4'	6.9'	28	3.8'	1.8'	7'	7.0'	26	3.2'	2.3'
				12'	25	2.7'	2.7'	11'	6.4'	19	3.4'	2.9'	5'	8.7'	18	4.7'	2.3'	9'	9.0'	16	4.2'	2.9'
20W MR-16 FL (BAB)	40°	525	4000	2'	131	1.5'	1.5'	2'	1.2'	85	2.0'	1.7'	1'	1.7'	66	4.8'	1.5'	2'	2.0'	46	3.4'	2.1'
				3'	58	2.2'	2.2'	3'	1.7'	38	3.0'	2.5'	2'	3.5'	16	9.7'	2.9'	3'	3.0'	21	5.0'	3.1'
				4'	33	2.9'	2.9'	4'	2.3'	21	4.1'	3.4'	3'	5.2'	7	14.5'	4.4'	4'	4.0'	12	6.7'	4.1'
				5'	21	3.6'	3.6'	5'	2.9'	14	5.1'	4.2'	4'	6.9'	4	19.3'	5.8'	5'	5.0'	7	8.4'	5.1'
35W MR-16 NSP (FRB)	12°	8700	4000	7'	178	1.5'	1.5'	6'	3.5'	157	1.7'	1.5'	2'	3.5'	272	1.7'	0.8'	4'	4.0'	192	1.7'	1.2'
				10'	87	2.1'	2.1'	9'	5.2'	70	2.5'	2.2'	3'	5.2'	121	2.6'	1.3'	6'	6.0'	85	2.6'	1.8'
				13'	51	2.7'	2.7'	12'	6.9'	39	3.4'	2.9'	4'	6.9'	68	3.5'	1.7'	8'	8.0'	48	3.4'	2.4'
				16'	34	3.4'	3.4'	15'	8.7'	25	4.2'	3.6'	5'	6.7'	44	4.3'	2.1'	10'	10.0'	31	4.3'	3.0'
35W MR-16 SP (FRA)	20°	3900	4000	6'	108	2.1'	2.1'	5'	2.9	101	2.4'	2.0'	2'	3.5'	122	3.1'	1.4'	3'	3.0'	153	2.2'	1.5'
				8'	61	2.8'	2.8'	7'	4.0'	52	3.3'	2.9'	3'	5.2'	54	4.7'	2.1'	5'	5.0'	55	3.6'	2.5'
				10'	39	3.5'	3.5'	9'	5.2'	31	4.3'	3.7'	4'	6.9'	30	6.2'	2.8'	7'	7.0'	28	5.1'	3.5'
				12'	27	4.2'	4.2'	11'	6.4'	21	5.2'	4.5'	5'	8.7'	20	7.8'	3.5'	9'	9.0'	17	6.6'	4.5'
35W MR-16 FL (FMW)	40°	1600	4000	4'	100	2.9'	2.9'	3'	1.7'	115	3.0'	2.5'	1'	1.7'	200	4.8'	1.5'	3'	3.0'	63	5.0'	3.1'
				6'	44	4.4'	4.4'	5'	2.9'	42	5.1'	4.2'	2'	3.5'	50	9.7'	2.9'	4'	4.0'	35	6.7'	4.1'
				8'	25	5.8'	5.8'	7'	4.0'	21	7.1'	5.8'	3'	5.2'	22	14.5'	4.4'	5'	5.0'	23	8.4'	5.1'
				10'	16	7.3'	7.3'	9'	5.2'	13	9.1'	7.6'	4'	6.9'	13	19.3'	5.8'	6'	6.0'	16	10.1'	6.2'
37W MR-16 IR (NSP)	10°	11500	4000	6'	180	1.4'	1.4'	7'	4.0'	152	1.6'	1.4'	3'	5.2'	160	2.1'	1.0'	5'	5.0'	163	1.8'	1.2'
				12'	80	2.1'	2.1'	10'	5.8'	75	2.3'	2.0'	4'	6.9'	90'	2.9'	1.4'	7'	7.0'	83	2.5'	1.7'
				16'	45	2.8'	2.8'	13'	7.5'	44	3.0'	2.8'	5'	8.7'	58	3.6'	1.7'	9'	9.0'	50	3.2'	2.2'
				20	29	3.5'	3.5'	16'	9.2'	29	3.7'	3.2'	6'	10.4'	40	4.3'	2.1'	11'	11.0'	34	3.9'	2.7'
37W MR-16 IR (NFL)	25°	3500	4000	8'	97	2.7'	2.7'	5'	2.9'	91	3.0'	2.6'	2'	3.5'	109	4.2'	1.8'	3'	3.0'	137	2.8'	1.9'
				8'	55	3.5'	3.5'	7'	4.0'	46	4.2'	3.6'	3'	5.2'	49	6.2'	2.7'	5'	5.0'	49	4.7'	3.1'
				10'	35	4.4'	4.4'	9	5.2'	28	5.4'	4.6'	4'	6.9'	27	8.3'	3.5'	7'	7.0'	25	6.5'	4.4'
				12'	24	5.3'	5.3'	11'	6.4'	19	6.6'	5.6'	5'	8.7'	18'	10.4'	4.4'	9'	9.0'	15	8.4'	5.6'
37W MR-16 IR (FL)	40°	2050	4000	4'	128	2.9'	2.9'	3'	1.7'	148	3.0'	2.5'	1'	1.7'	258	4.6'	1.5'	3'	3.0'	61	5.0'	3.1'
				6'	57	4.4'	4.4'	5'	2.9'	53	5.1'	4.2'	2'	3.5'	64	9.7'	2.9'	4'	4.0'	45	6.7'	4.1'
				8'	32	5.8'	5.8'	7'	4.0'	27	7.1'	5.9'	3'	5.2'	28	14.5'	4.4'	5'	5.0'	29	8.4'	5.1'
				10'	21	7.3'	7.3'	9'	5.2'	16	9.1'	7.6'	4'	6.9'	16	19.3'	5.8'	6'	6.0'	20	10.1'	6.2'
42W MR-16 VNSP (EZY)	9°	13,100	3500	8'	205	1.3'	1.3'	7'	4.0	174	1.5'	1.3'	3'	5.2'	182	1.9'	0.9'	5'	5.0'	185	1.6	1.1'
				12'	91	1.9'	1.9'	10'	5.8'	85	2.1'	1.8'	4'	6.9'	102	2.6'	1.3'	7'	7.0	95	2.2'	1.6'
				16'	51	2.5'	2.5'	13'	7.5'	50	2.7'	2.4'	5'	8.7'	66	3.2'	1.6'	9'	9.0'	57	2.8'	2.0'
				20'	33	3.1'	3.1'	16'	9.2'	33	3.4'	2.9'	6'	10.4	45	3.8'	1.9'	11'	11.0'	38	3.5'	2.4'
42W MR-16 NFL (EYS)	27°	2400	4000	4'	150	1.9'	1.9'	3'	1.7'	173	2.0'	1.7'	1'	1.7'	300	2.3'	1.0'	3'	3.0	94	3.1'	2.0'
				6'	67	2.9'	2.9'	5'	2.9'	62	3.3'	2.8'	2'	3.5'	75	4.6'	1.9'	4'	4.0'	53	4.1'	2.7'
				8'	38	3.8'	3.8'	7'	4.0'	32	4.6'	3.9'	3'	5.2'	33	7.0'	2.9'	5'	5.0'	34	5.1'	3.4'
				10'	24	4.8'	4.8'	9'	5.2'	19	5.9'	5.0'	4'	6.9'	19	9.3'	3.6'	6'	6.0'	24	6.1'	4.1'
50W MR-16 NSP (EXT)	14°	10,200	4000	8'	159	2.0'	2.0'	7'	4.0'	135	2.3'	2.0'	3'	5.2'	142	3.1'	1.5'	5'	5.0'	144	2.5'	1.7'
				12'	71	2.9'	2.9'	10'	5.8'	66	3.3'	2.8'	4'	6.9'	80	4.1'	2.0'	7'	7.0'	74	3.5'	2.4'
				16'	40	3.8'	3.9'	13'	7.5'	39	4.3'	3.7'	5'	8.7'	51	5.1'	2.5'	9'	9.0'	45	4.5'	3.1'
				20'	26	4.9'	4.9'	15'	9.2'	28	5.3'	4.5'	6'	10.4'	35	6.2'	2.9'	11'	11.0'	30	5.5'	3.8'
50W MR-16 NFL (EXZ)	27°	3400	4000	6'	94	2.9'	2.9'	5'	2.9'	88	3.3'	2.8'	2'	3.5'	106	4.6'	1.9'	3'	3.0'	134	3.1'	2.0'
				8'	53	3.8'	3.8'	7'	4.0'	45	4.6'	3.9'	3'	5.2'	47	7.0'	2.9'	5'	5.0'	48	5.1'	3.4'
				10'	34	4.8'	4.8'	9'	5.2'	27	5.9'	5.0'	4'	6.9'	27	9.3'	3.6'	7'	7.0'	25	7.1'	4.8'
				12'	24	5.8'	5.8'	11'	6.4'	18	7.2'	6.1'	5'	8.7'	17	11.6'	4.8'	9'	9.0'	15	9.2'	6.1'
50W MR-16 FL (EXN)	40°	1850	4000	4'	116	2.9'	2.9'	3'	1.7'	134	3.0'	2.5'	1'	1.7'	231	4.8'	1.5'	3'	3.0'	73	5.0'	3.1'
				6'	51	4.4'	4.4'	5'	2.9	48	5.1'	4.2'	2'	3.5'	58	9.7'	2.9'	4'	4.0'	41	6.7'	4.1'
				8'	29	5.8'	5.8'	7'	4.0'	25	7.1'	5.9'	3'	5.2'	26	14.5'	4.4'	5'	5.0'	26	8.4'	5.1'
				10'	19	7.3'	7.3'	9'	5.2'	15	9.1'	7.6'	4'	6.9'	14	19.3'	5.8'	6'	6.0'	18	10.1'	6.2'
50W MR-16 WFL (FNV)	55°	1150	4000	3'	128	3.1'	3.1'	3'	1.7'	83	4.6'	3.6'	1'	1.7'	144	22.3'	2.1'	2'	2.0'	102	5.7'	2.9'
				5'	46	5.2'	5.2'	5'	2.9'	30	7.6'	6.0'	2'	3.5'	36	44.5'	4.2'	3'	3.0'	45	8.6'	4.4'
				7'	23	7.3'	7.3'	7'	4.0'	15	10.7'	8.4'	3'	5.2'	16	66.8'	6.2'	4'	4.0'	25	11.4'	5.9'
				9'	14	9.4'	9.4'	9'	5.2'	9	13.7'	10.8'	4'	6.9'	9	89.1'	8.3'	5'	5.0'	16	14.3'	7.4'
73W MR-16 SP	10°	14000	4000	8'	219	1.4'	1.4'	7'	4.0'	186	1.6'	1.4'	3'	5.2'	194	2.1'	1.0'	5'	5.0'	198	1.8'	1.2'
				12'	97	2.1'	2.1'	10'	5.8'	91	2.3'	2.0'	4'	8.9'	109	2.9'	1.4'	7'	7.0'	101	2.5'	1.7'
				16'	55	2.8'	2.9'	13'	7.5'	54	3.0'	2.6'	5'	8.7'	70	3.6'	1.7'	9'	9.0'	61	3.2'	2.5'
				20'	35	3.5'	3.5'	16'	8.2'	36	3.7'	3.2'	6'	10.4'	49	43'	2.1'	11'	11.0'	41	3.8'	2.7'
73W MR-16 FL	36°	2500	4000	4'	156	2.5'	2.6'	3'	1.7'	180	2.7'	2.3'	1'	1.7'	313	3.8'	1.3'	3'	3.0'	98	4.4'	2.8'
				6'	59	3.8'	3.8'	5'	2.9'	65	4.5'	3.8'	2'	3.5'	78	7.5'	2.6'	4'	4.0'	55	5.8'	3.7'
				8'	39	5.2'	5.2'	7'	4.0'	33	6.3'	5.3'	3'	5.2'	35	11.4'	3.9'	5'	5.0'	35	7.3'	4.6'
				10'	25	6.5'	6.5'	9'	5.2'	20	6.1'	6.6'	4'	6.9'	20	15.2'	5.2'	6'	6.0'	25	6.7'	5.5'
75W MR-16 NSP (EYF)	14°	12,000	4000	8'	188	2.0'	2.0'	7'	4.0'	159	2.3'	2.0'	3'	5.2'	167	3.1'	1.5'	5'	5.0'	170	2.5'	1.7'
				12'	83	2.9'	2.9'	10'	5.8'	78	3.3'	2.8'	4'	6.9'	94	4.1'	2.0'	7'	7.0'	87	3.5'	2.4'
				16'	47	3.9'	3.9'	13'	7.5'	40	4.3'	3.7'	5'	8.7'	60	5.1'	2.5'	9'	9.0'	52	4.5'	3.1'
				20'	30	4.9'	4.9'	16'	9.2'	30	5.3'	4.5'	6'	10.4'	42	6.2'	2.9'	11'	11.0'	35	5.5'	3.8'
75W MR-16 NFL (EYJ)	25°	4900	4000	6'	136	2.7'	2.7'	5'	2.9'	127	3.0'	2.6'	2'	3.5'	153	4.2'	1.8'	3'	3.0'	192	2.8'	1.9'
				8'	77	3.5'	3.5'	7'	4.0'	65	4.2'	3.6'	3'	5.2'	68	6.2'	2.7'	5'	5.0'	69	4.7'	3.1'
				10'	49	4.4'	4.4'	9'	5.2'	39	5.4'	4.6'	4'	6.9'	38	8.3'	3.5'	7'	7.0'	35	6.5'	4.4'
				12'	34	5.3'	5.3'	11'	6.4'	26	6.6'	5.6'	5'	8.7	25	10.4'	4.4'	9'	9.0'	21	8.4'	5.6'
75W MR-16 FL (EYC)	42°	2100	4000	4'	131	3.1'	3.1'	3'	1.7'	152	3.2'	2.7'	1'	1.7'	263	5.5'	1.5'	3'	3.0'	62	5.4'	3.3'
				6'	58	4.6'	4.6'	5'	2.9'	55	5.4'	4.4'	2'	3.5'	66	11.0'	3.1'	4'	4.0'	46	7.2'	4.3'
				8'	33	6.1'	6.1'	7'	4.0'	28	7.5'	6.2'	3'	5.2'	29	16.5'	4.6'	5'	5.0'	30	9.0'	5.4'
				10'	21	7.7'	7.7'	9'	5.2'	17	9.7'	8.0	4'	6.9'	16	22.0'	6.1'	6'	6.0'	21	10.8'	6.5'
MR-16 HALOGEN LOW VOLTAGE BI-PIN LAMPS WITH ALUMINIZED (NON-DICHROIC) REFLECTORS																						
50W MR-16 NSP	11°	10,500	3500	8'	164	1.5'	1.5'	7'	4.0'	139	1.8'	1.6'	3'	5.2'	146	2.4'	1.2'	5'	5.0'	148	1.9'	1.4'
				12'	73	2.3'	2.3'	10'	5.8'	68	2.6'	2.2'	4'	6.9'	82	3.2'	1.5'	7'	7.0'	76	2.7'	1.9'
				16'	41	3.1'	3.1'	13'	7.5'	40	3.3'	2.9'	5'	8.7'	53	4.0'	1.9'	9'	9.0'	46	3.5'	2.5'
				20'	26	3.9'	3.9	16'	9.2'	27	4.1'	3.6'	6'	10.4'	36	4.8'	2.3'	11'	11.0'	31	4.3'	3.0'
50W MR-16 NFL	25°	3000	3500	6'	83	2.7'	2.7'	5'	2.9'	78	3.0'	2.6'	2'	3.5'	94	4.2'	1.8'	3'	3.0'	118	2.8'	1.9'
				8'	47	3.5'	3.5'	7'	4.0'	40	4.2'	3.6'	3'	5.2'	42	6.2'	2.7'	5'	5.0'	42	4.7'	3.1'
				10'	30	4.4'	4.4'	9'	5.2'	24	5.4'	4.8'	4'	6.9'	23	8.3'	3.5'	7'	7.0'	22	6.5'	4.4'
				12'	21	5.3'	5.3'	11'	6.4'	16	6.6'	5.6'	5'	8.7'	15	10.4	4.4'	9'	9.0'	13	8.4'	5.6'
50W MR-16 FL	40°	1900	3500	4'	119	2.9'	2.9'	3'	1.7'	137	3.0'	2.5'	1'	1.7'	238	4.8'	1.5'	3'	3.0'	75	5.0'	3.1'
				6'	53	4.4'	4.4'	5'	2.9'	49	5.1'	4.2'	2'	2.9'	59	9.7'	2.9'	4'	4.0'	42	6.7'	4.1'
				8'	30	5.8'	5.8'	7'	4.0'	25	7.1'	5.9'	3'	4.0'	26	14.5'	4.4'	5'	5.0'	27	8.4'	5.1'
				10'	19	7.3'	7.3'	9'	5.2'	15	9.1'	7.6'	4'	5.2'	15	19.3'	5.8'	6'	6.0'	19	10.1'	6.2'

PHILIPS
Canlyte www.canlyte.com
3015 Louis-Amos, Lachine, Québec H8T 1C4
(514) 636-0670 • Fax (514) 636-0460

Spécifications are subject to charges without notice.
© Koninklijke Philips Electronics N.V., 2010. All rights reserved.

PHILIPS LIGHTOLIER®