369909b 1 03.11.16

Vive™ PowPak® CCO Module

The PowPak® CCO Module is a low-voltage radio frequency (RF) control that provides a single dry contact closure output based on input from Pico® remote controls and Radio Powr Savr™ occupancy and daylight sensors. It can be powered by to 24 V∼ or 24 V⎓ for easy connection and integration into building management, HVAC, VAV, and other 3rd-party systems.

Communication with RF input devices, such as Pico® remote controls and Radio Powr Savr™ sensors, is accomplished using Lutron® Clear Connect® RF Technology.

These products are also compatible with the Vive™ hub which enables a simple setup process using a standard web browser on any Wi-Fi enabled phone, tablet or computer. It also enables control and monitoring of all Vive™ devices. The Vive™ hub can be added at any time and preserves existing system setup by extracting local programming from each device. For a complete list of features supported with the Vive™ hub, see specification submittal 369902.

Note for Replacement: RMJS/URMJS - the “S” model can replace the non-”S” model.

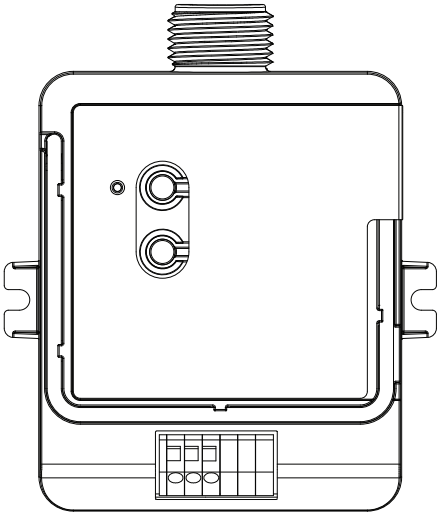

RMJS-CCO1-24-B model shown

Features

- Single contact closure output including both normally open (NO) and normally closed (NC) dry contacts
- Maintained output type
- Operates at 24 V∼ or 24 V⎓
- Receives wireless inputs from up to 10 Pico® remote controls, 10 Radio Powr Savr™ occupancy/vacancy sensors, and 1 Radio Powr Savr™ daylight sensor
- Utilizes Lutron® Clear Connect® RF Technology – refer to model number chart below for frequency band data
- Screw tabs provided for surface mounting (recommended); or mounts to a U.S style junction box through a standard size knockout
- Complies with requirements for use in a compartment handling environmental air (plenum) per NEC® 2011 300.22(C)(3) (RMJS- and URMJS- models only)

Job Name:	Model Numbers:
Job Number:	

Models

Model Number	Region	Operating Voltage	Frequency Band
RMJS-CCO1-24-B	U.S.A., Canada, Mexico	24 V∼ or 24 V⎓	431.0 – 437.0 MHz
URMJS-CCO1-24B	U.S.A. (BAA Compliant)	24 V∼ or 24 V⎓	431.0 – 437.0 MHz

NOTE: Contact Lutron for frequency band compatibility for your geographic region if it is not indicated above.

Job Name:	Model Numbers:
Job Number:	

Specifications

Regulatory Approvals

RMJS-/URMJS- models

- UL® Listed (U.S.A.)
- UL® 2043 Plenum Rated (U.S.A.)
- FCC approved. Complies with the limits for a Class B device, pursuant to Part 15 of the FCC rules. (U.S.A.)
- IC (Canada) (RMJS- only)
- COFETEL (Mexico) (RMJS- only)

Power

- IEC PELV/NEC® Class 2
- Operating voltage: 24 V∼/24 V⎓
- Operating current, nominal: 45 mA (24 V∼)
  35 mA (24 V⎓)
- Standby Power Consumption (all models): < 1.0 W

System Communication

- Operates using Clear Connect® RF Technology for reliable wireless communication; refer to model number chart on page 1 for frequency band details
- RF range is 30 ft (9 m) for RMJS- and URMJS- models
- Contact Lutron first for applications using foil-backed or metallic ceiling tiles.

Environment

- Ambient operating temperature: 32 °F to 131 °F (0 °C to 55 °C)
- 0% to 90 humidity, non-condensing
- For indoor use only

Contact Closure Output

- Accepts input voltages of 0–24 V∼/0–24 V⎓; see chart below for load switching capacities

Switching Voltage	Resistive Load
0-24 V⎓	1.0 A
0-24 V∼	0.5 A

- Provides both normally open (NO) and normally closed (NC) dry contacts
- Maintained output type
- CCO terminals accept 20 AWG to 16 AWG (0.5 mm^2 to 1.5 mm^2) solid or stranded wire
- Output is latching
- The CCO is not rated to control unclamped, inductive loads. Inductive loads include, but are not limited to, relays, solenoids, and motors. To control these types of equipment, a flyback diode must be used (DC voltages only). See diagram below. For more information, please see Application Note #434 (p/n 048434).

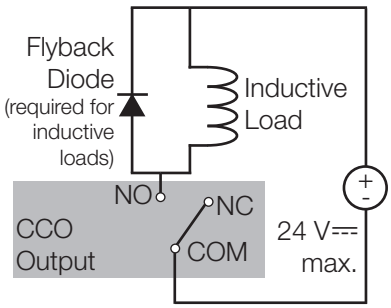

Job Name:	Model Numbers:
Job Number:	

Dimensions

Dimensions are shown as: in (mm)

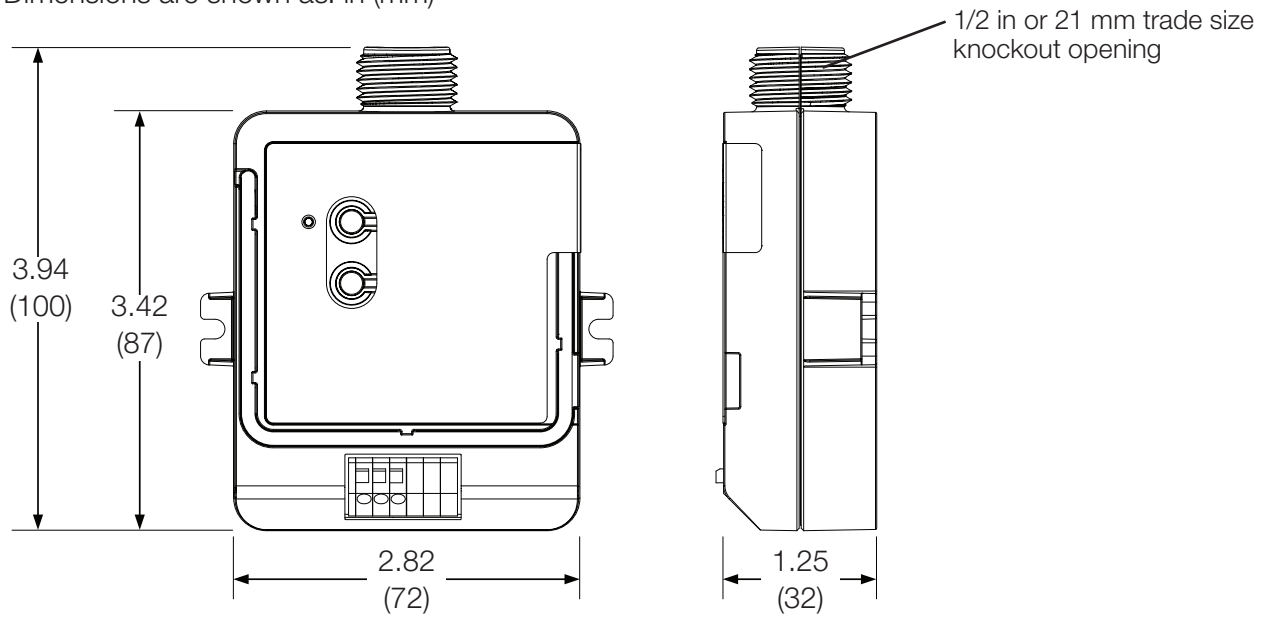

Range Diagrams

RMJS- and URMJS- models

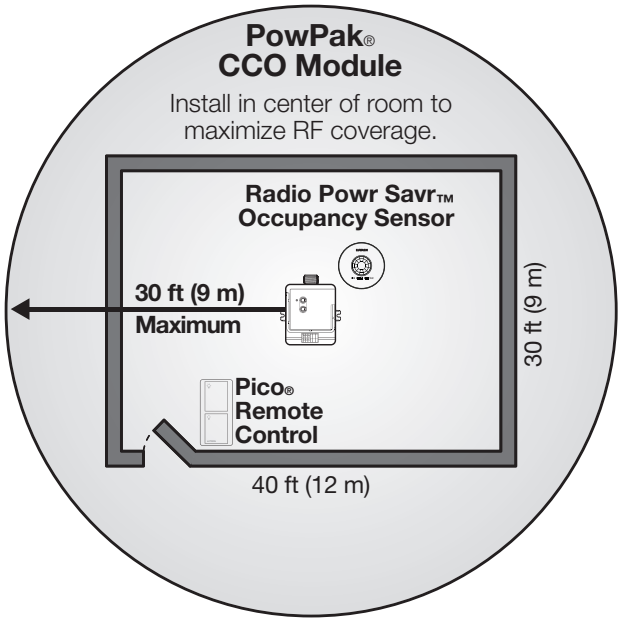

All Wireless Transmitters must be installed within 30 ft (9 m) of the PowPak® Module.

- Contact Lutron first for applications using foil-backed or metallic ceiling tiles.

Job Name:	Model Numbers:
Job Number:	

System Diagram

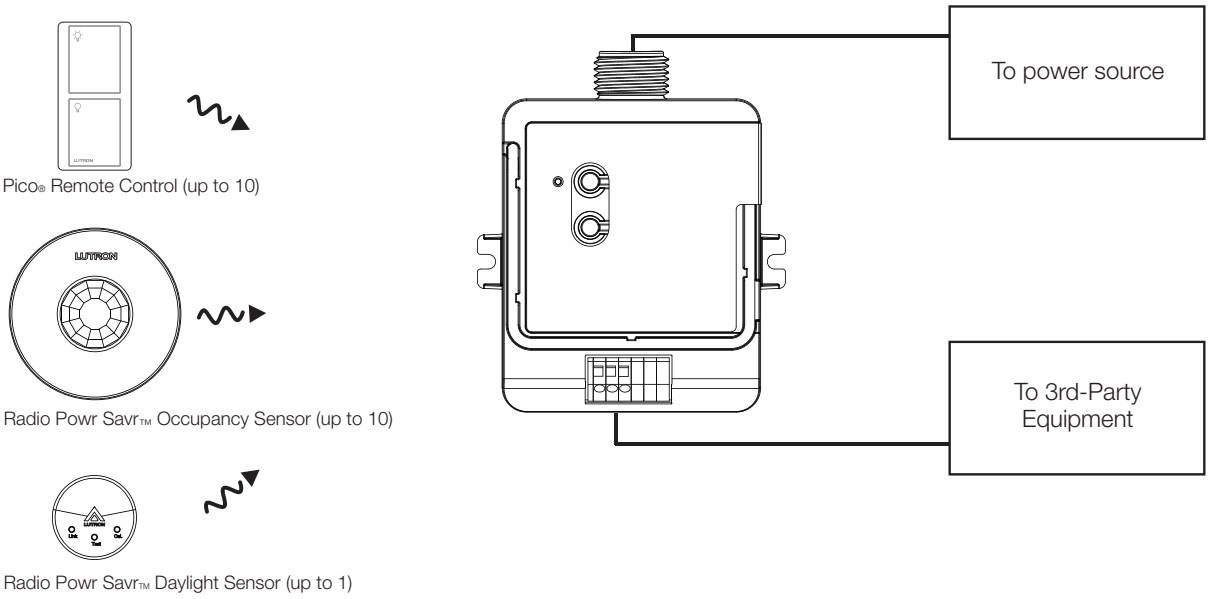

Default Operation

Transmitting Device	Transmitted Command	CCO Default Action
Pico® Remote Control	On	NO = Close, NC = Open
	Off	NO = Open, NC = Close
	Raise	No Action
	Lower	No Action
	Preset	NO = Close, NC = Open
Radio Powr Savr™ Occupancy Sensor	Occupied	NO = Close, NC = Open
	Unoccupied	NO = Open, NC = Close
Radio Powr Savr™ Vacancy Sensor	Occupied	No Action
	Unoccupied	NO = Open, NC = Close
Radio Powr Savr™ Daylight Sensor	Ambient Light Below Target Level	NO = Close, NC = Open
	Ambient Light Above Target Level	NO = Open, NC = Close

Job Name:	Model Numbers:
Job Number:	

Wiring Diagram (Recommended)

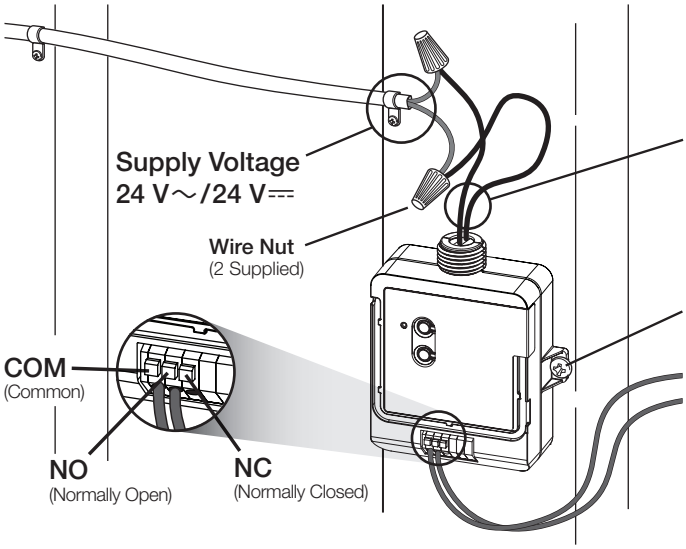

NOTE: RMJS- and URMJS- models are supplied with three twist-on wire connectors.

NOTE: CCO Module supply wires can be connected in any polarity.

Mounting screw
(2 Supplied)

To CCO controlled device.

NOTE: When wiring CCO output, use 20 AWG to 16 AWG (0.5 mm^2 to 1.5 mm^2) solid or stranded wire.

NOTE: The CCO output may be wired using either the NO or NC terminal. Refer to the Default Operation chart on page 6 for more information regarding the behavior of the CCO output terminals.

Job Name:	Model Numbers:
Job Number:	

Wiring Diagram (Junction Box Optional)

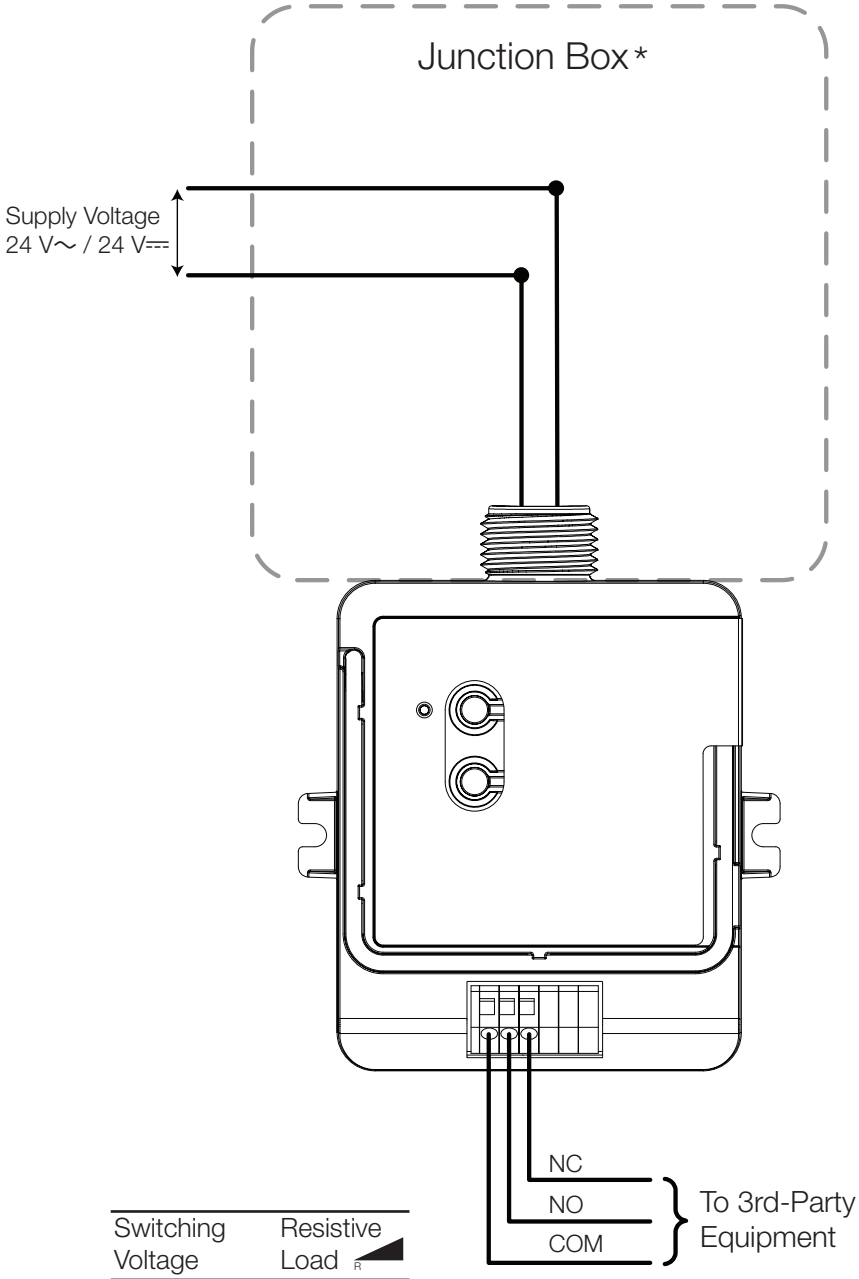

Switching Voltage	Resistive Load R
0-24 V⎓	1.0 A
0-24 V~	0.5 A

* **NOTE:** Some applications (in U.S.A.) require the PowPak® module to be installed inside an additional junction box. For information about how to perform this installation, please visit www.lutron.com, Application Note #423 (P/N 048423). Please consult all local and national electric codes for proper installation methods.

Job Name:	Model Numbers:
Job Number:	