• Revised •
04/20/15

SIRIUS 3RV motor starter protectors up to 100 A

Size S00, S0

For motor protection CLASS 10

Selection and ordering data

Size	Rated Current	Page
S00	up to 16 A	1/4
S0	up to 40 A	1/4
S2	up to 65 A	1/5
S3	up to 100 A	1/5

For motor protection CLASS 20

Selection and ordering data

Size	Rated Current	Page
S2	up to 65 A	1/5
S3	up to 100 A	1/5

General data for SIRIUS motor starter protectors

	Page
Technical data	1/18
Overview	1/28
Characteristics	1/32
Circuit diagrams	1/32
Dimension drawings	1/33

Ciruit Breakers 3RV17, 3RV27, 3RV28

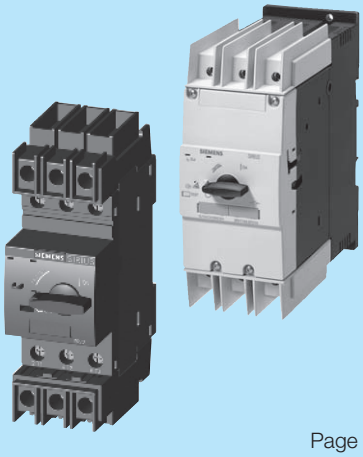

	Page
Selection and ordering data	1/6
Dimension drawings	1/34

SIRIUS 3RV29 infeed system

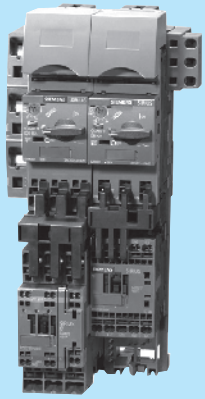

	Page
Selection and ordering data	1/16-1/17
Technical data	1/47
Overview	1/14-1/15
Dimension drawings	1/48

3RV MSP auxiliaries and accessories

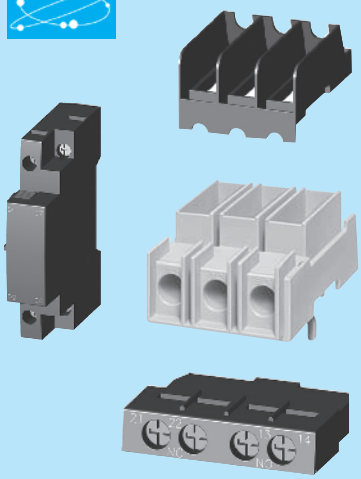

	Page
Selection and ordering data	1/7-1/8
Technical data	1/27
Overview	1/35
Circuit diagrams	1/37
Dimension drawings	1/38

3RV busbar and accessories

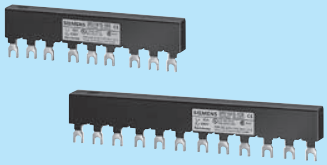

	Page
Selection and ordering data	1/8
Overview	1/39
Technical data	1/40

Accessories for motor starter protectors with Spring-Type terminals

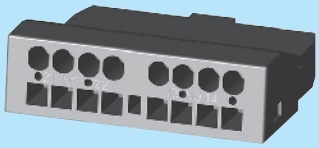

	Page
Selection and ordering data	1/7
Technical data	1/28

Mounting Accessories

	Page
Selection and ordering data	1/9 -1/12
Overview	1/36
Technical data	1/38

Rotary operating mechanisms

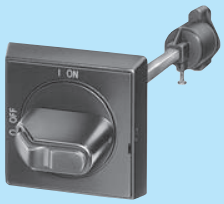

	Page
Selection and ordering data	1/13
Technical data	1/28
Overview	1/42
Circuit diagrams	1/43
Dimension drawings	1/43

Enclosures and front plates

	Page
Selection and ordering data	1/13
Overview	1/45
Dimension drawings	1/46

Description

The 3RV203 / 104 MSP's are UL approved as Self Protected Combination Motor Controllers which are also called Type E. In this application, all the required functions for a motor branch are provided in one device: disconnect, short circuit protection, motor control and overload protection. A type E terminal adaptor is required for all S2 frame 3RV2031 above 45A and all S2 frame 3RV2032 as well as for all S3 frame motor starter protectors.

The 3RV203 / 104 MSP's are also approved for use as follows:
– Manual Motor Controller: Motor starter, motor disconnect, control and overload protection.
– Group Installation: Motor starter only, motor disconnect, control and overload protection.
– Tap conductor Protection in Group Installation acc. NEC: Motor starter only; motor disconnect, control and overload protection.

When the 3RV203 /104 is used with one of the 3 above mentioned approvals, they can be installed downstream of one circuit breaker or fuse set.

For more detailed application information and rules how to apply, size and rate these MSP's in control panels in general, in group installations or in accordance to international IEC standards visit our website: www.usa.siemens.com/controlpaneldesign

Ordering Information

- ON/OFF rotary handle with lockout and visible trip indication.
- Adjustment dial for setting to motor FLA.
- Class 10 overload trip characteristics.
- Short circuit trip at 13 times the maximum setting of the FLA adjustment dial.
- Short circuit current rating:
- Ambient compensated up to 140° F (applies to side by side mounting).
- Phase loss sensitivity.
- Test trip function.
- Auxiliaries and Accessories see pages 1/7–1/17.
- General Information see pages 1/29–1/32.
- Technical Data see pages 1/18–1/28.
- Dimensions see page 1/33.

Note: **Select MSP by motor Full Load Amperes. Horsepower ratings are for reference only.**

Illustration	FLA Adjustment Range [A]	Single Phase HP rating 1)		3 Phase HP Rating 1)				Inst. Short-Circuit Release [A]	UL AIC (480V) [kA] 6)	Trip Class 10 Order Number 4)	Trip Class 20 Order Number 4)
		115V	240V	200V	230V	460V	575V				
	3RV203 Frame Size S2										
	9.5 - 14	1.5	3	5	5	10	15	208	65	**3RV2031-4SA10**	**3RV2031-4SB10**
	12 - 17	1.5	3	5	7.5	15	15	260	65	**3RV2031-4TA10**	**3RV2031-4TB10**
	14 - 20	1.5	3	7.5	7.5	15	20	260	65	**3RV2031-4BA10**	**3RV2031-4BB10**
	18 - 25	2	5	7.5	10	20	25	325	65	**3RV2031-4DA10**	**3RV2031-4DB10**
	22 - 32	3	5	10	10	25	30	416	65	**3RV2031-4EA10**	**3RV2031-4EB10**
	28 - 36	3	7.5	15	15	30	40	520	65	**3RV2031-4PA10**	**3RV2031-4PB10**
	32 - 40	3	7.5	15	15	30	40	585	65	**3RV2031-4UA10**	**3RV2031-4UB10**
	35 - 45	3	10	15	15	40	50	650	65	**3RV2031-4VA10**	**3RV2031-4VB10**
	42 - 52	5	10	15	20	40	50	741	65	**3RV2031-4WA10**	**3RV2031-4WB10**
	49 - 59	5	15	20	25	50	60	845	30	**3RV2031-4XA10**	**3RV2031-4XB10**
	54 - 65	5	15	20	25	50	60	845	30	**3RV2031-4JA10**	**3RV2031-4JB10**
	3RV104 Frame Size S3										
	28 - 40	3	7.5	15	15	30	40	520A	65	**3RV1041-4FA10**	**3RV1042-4FB10**
	36 - 50	5	10	15	20	40	50	650A	65	**3RV1041-4HA10**	**3RV1042-4HB10**
	45 - 63	5	15	20	25	50	60	819A	65	**3RV1041-4JA10**	**3RV1042-4JB10**
	57 - 75	7.5	15	25	25	60	75	975A	65	**3RV1041-4KA10**	**3RV1042-4KB10**
	70 - 90	10	20	30	30	75	100 3)	1170A	65	**3RV1041-4LA10**	**3RV1042-4LB10**
	80 - 100	10	25	40	40	75	100 3)	1235A	65	**3RV1041-4MA10**	**3RV1042-4MB10**

1) Select motor starter protector by motor full load amps. Horse power ratings for reference only.
2) Size S2 and S3 are listed as type E combination motor controllers. For required Type E terminals see page 1/10. 3RV2031 MSP's with a current setting limit of 45A or less do not require a type E terminal and fulfill the spacing requirements of UL508.
3) Shaded ratings apply for group installation only. These ratings do not apply as UL listed manual combination starters.
4) Pre-assembled motor starter protector and transverse auxiliary switch with 1NO + 1NC is available. Replace the last digit of the order no. with a "5".
5) 3RV1 MSP's can only be used with 3RT1 contactors and accessories. 3RV2 MSP's can only be used with 3RT2 contactors and accessories.
6) For 100kA SCCR rated MSP's, change the part number from 3RV2031 to 3RV2032. (applies to S2 frame only through 65A).

Refer to pages 1/18 to 1/20 when using an MSP in a Manual Motor Starter or a Manual Self-Protected Combination Motor Controller.