Safety Switch Selection Guide

Type	Voltage	Fuse Type		Fuse Class	Ampere Rating	Number of Poles③	Enclosure Type Type 1	Type 3R	Type 12①	Type 4 Painted Steel	Type 4X Stainless Steel	Type 4X Non Metallic	NEMA 7/9 Hazardous Location
Air Conditioning Disconnect	Max. 240Vac	Fusible	Cartridge	H	30 and 60	2	—	Yes	—	—	—	—	—
		Non-Fusible	—	—	60	2	—	Yes	—	—	—	—	—
	Max. 240Vac	Moulded Case Switch	—	—	60	2	—	Yes	—	—	—	—	—
	Max. 600Vac	Non-Fusible	—	—	30-80	3	—	Yes	—	—	—	—	—
General Duty	Single Throw	Fusible	Plug	—	30	1 and 2	Yes	Yes	—	—	—	—	—
	Max. 240Vac		Cartridge	H	30-600	2 and 3	Yes	Yes	—	—	—	—	—
		Non-Fusible	—	—	30-600	2 and 3	Yes	Yes	—	—	—	—	—
Heavy Duty	Single Throw	Fusible	Cartridge	H	30-600	2, 3, and 4	Yes	Yes	Yes①②	Yes②	Yes②	—	—
	Max. 600Vac			L	800-1200		Up to 1200A	Up to 1200A	Up to 1200A	400-1200A	Up to 1200A	—	—
	250 Vdc & 600 Vdc	Non-Fusible	—	—	30-1200	2, 3, and 4	Yes	Yes	Yes①② Up to 1200A	Yes② 400-1200A	Yes② Up to 1200A	—	—
6-Pole Motor Circuit②	Single Throw	Fusible	Cartridge	H	30-200	6	—	Yes	Yes①②	—	Yes②	—	—
	Max. 600Vac	Non-Fusible	—	—	30-200	6	—	Yes	Yes①②	—	Yes②	—	—
Double Throw③	Max. 600VAV 250Vdc	Fusible	Cartridge	H	30-200	2 and 3	Yes	Yes	Yes①②	Yes②	Yes②	—	—
				T (240V)	400-1200	3	Yes	Yes	400-600A	400-600A	400-600A		
				T (600V)		2, 3, 4, 6	Yes	Yes	Yes①②	Yes②	Yes②	—	—
		Non-Fusible③	—	—	30-1200	3	Yes	Yes	Up to 400A	400-600A	Up to 200A		
Enclosed Rotary Switches	Max. 600Vac	Non-Fusible	—	—	30-80	3			Yes①	—	Yes	Yes	—
Hazardous Location Disconnect Switch	Max. 600Vac 250Vdc	Fusible	Cartridge	J	30-100	3			—	—	—	—	Yes
		Non-Fusible	—	—	30-100	3			—	—	—	—	Yes
Enviroline All Stainless②	Single Throw	Fusible	Cartridge	H	30-400	2 and 3			—	—	Yes②	—	—
	Max. 600Vac/ DC	Non-Fusible	—	—	30-400	3			—	—	Yes②	—	—
Viewing Window	Single Throw	Fusible	Cartridge	H	30-1200	2, 3, 4, 6	—	—	Yes①	Yes	Yes	—	—
	Max. 600Vac/ DC	Non-Fusible	—	—	30-1200	2, 3, 4, 6	—	—	Yes①	Yes	Yes	—	—
Receptacle (Pin & Sleeve)②	Single Throw	Fusible	Cartridge	H	30-100	3	—	—	Yes①②	—	Yes②	—	—
	Max. 600Vac/ DC	Non-Fusible	—	—	60	3	—	—	Yes①②	—	Yes②	—	—
Quick Connect (Cam & Posi Lok)	Single Throw	Fusible	Cartridge	H	100-600	2, 3, and 4	Yes	Yes	—	—	—	—	—
	Max. 600Vac			L	800	2, 3, and 4	Yes	Yes	—	—	—	—	—
	Double Throw	Non-Fusible	—	—	100-800	2, 3, and 4	Yes	Yes					
	Max. 600Vac	w Non-Fusible	—	—	—	2, 3, and 4	Yes	Yes	—	—	—	—	—
		w Fuse	Cartridge	H	100-200	2, 3, and 4	Yes	Yes	—	—	—	—	—
				T	400-800	2, 3, and 4	Yes	Yes	—	—	—	—	—
Solar	Single Throw	Fusible		R	30-600	1 (3)	—	Yes	Yes①②	Yes②	—	—	—
	Max. 600Vdc	Non-Fusible		—	30-600	1 (3)	—	Yes	Yes①②	Yes②	—	—	—

Notes

① Type 12 enclosures (30-1200 amperes) can be field modified to meet Type 3R rainproof requirements when a factory provided drain screw is removed.

② Optional windows also available with type 12 or 4/4X enclosures.

③ Double throw non-fusible 4 pole 30-800A, 6 pole 30-100A.

Product Overview

- Used to open or close a circuit
- Non-fusible safety switches provide a means to manually connect or disconnect the load from the source
- Fusible safety switches provide a means to manually open and close a circuit and provide overcurrent protection by means of installed fuses
- Fusible switches certified for use as service entrance equipment (unless noted)
- Also commonly referred to as a disconnect switch or disconnect
- Available from 30–1200A
- All Padlockable
- Horsepower rated
- 100% load break rated (unless noted)
- Non-Fusible switches are 100% continuous duty rated and fusible switches are 80% continuous duty rated per CSA C22.2 No.4

Standards and Certifications

- C22.2 No.4 File #69743
- C22.2 No.14 (Enclosed Rotary) File #162136
- Det Norske Veritas
- ISO 9001:2008
- CSA certified Class I, Div, 1 & 2, Groups B, C & D; Class II, Div 1 & 2, Groups E, G & F; Class III, Div 1 & 2, Zone 1, IIB + H2 for NEMA 7/9.
- Seismic qualified (UBC and CBC) for Heavy Duty 30-800A
- ISO 1400

Fuse Clips/Class

		Adaptable to Accept the Following Fuse Class		
Safety Switch Type	**Standard Fuse Class Clips Supplied with Switch**	**R**	**J**	**T**
AC Disconnect	H	—	—	—
General Duty	H	30A-600A	400-600A	400-600A
Heavy Duty	H 30-600A L 800-1200A	30A-600A	240V-100-600A 600V-30-600A	200A-800A 1200A
Heavy Duty 6 Pole	H	30A-200A	60A-200A	200A
Double Throw	H 30-200A T 240V-600A-1200A T 600V-400A-800A L 600V-1200A	30A-400A	240V-200A Only 600V-200A-400A	240V-600A-1200A 600V-400A-1200A (Standard)
Enviroline All Stainless & Window	Same as Heavy Duty	Same as Heavy Duty		Same as Heavy Duty
Receptacle (Pin & Sleeve)	H	30A-100A	60A-100A	—
Solar	R	30A - 600A	—	—

Note: Refer to specific switch technical data page for field adaptation notes.

Catalogue Number Selection

Safety Switch

4 HD 3 6 3 NF CHRW

Enclosure Type
- **1** = Type 1 indoor painted steel
- **3** = Type 3R outdoor painted steel
- **4** = Type 4/4X watertight, stainless 30 to 200A, painted steel 400A to 1200A
- **12** = Type 12 dustight, painted steel

Switch Type
- **HD** = Heavy Duty
- **G** = General Duty
- **DT** = Double Throw

Voltage Max AC
- **1** = 120Vac
- **2** = 240Vac
- **6** = 600Vac

Poles/Blades
- **1** = 1 pole
- **2** = 2 poles
- **3** = 3 poles
- **3** = 4 poles
- **6** = 6 poles

Ampere
- **1** = 30
- **2** = 60
- **3** = 100
- **4** = 200
- **5** = 400
- **6** = 600
- **7** = 800
- **8** = 1200

Fused/Non Fused & Neutral
- **NF**= Non Fused no Neutral
- **N** = Fused with Neutral
- **Blank**= Fused no Neutral

Options ②
- **W** =Window for type 12, 4/4X only
- **SS** =Stainless Steel> 200A
- **316** =Grade 316 Stainless Steel
- **CHR**=Crouse Hinds Receptacle type 12, 4x
- **AER**=Appleton Receptacle (screw door) type 12, 4x
- **ARL**=Appleton Receptacle (screw cap) type 12, 4x
- **RSR**=Russelstoll Receptacle type 12, 4x

Notes

① Always verify the number of poles and wires required since catalogue numbers may appear in multiple tables.

② See **Pages 12** through **14** for additional Flex Centre options.

This table is intended for use in breaking down existing catalogue numbers. It is not intended for building new catalogue numbers.

CDH 3 6 1 U W K XW

Switch Type
- **3GAC** = Light Duty for HVac - 3R
- **GP** = Plug Fuse
- **G** = General Duty 400A & 600A 1ph, 200A & 600A 3ph
- **CDG**= General Duty 30 to 200A 1ph, 30 to 100A 3ph
- **CDH**= Heavy Duty Enviroline
- **DS** = Hazardous Location
- **CDH**= Heavy Duty Single Throw Quick Connect (Refer to page 57)
- **CDT**= Heavy Duty Double Throw Quick Connect (Refer to page 57)
- **CDH**= Solar Switches
- **ER5**= Enclosed Rotary
- **CER5**= Enclosed Rotary

Poles/Blades
- **1** = 1 pole (Solar)
- **2** = 2 poles
- **3** = 3 poles
- **4** = 4 poles

Voltage Max
- **1** = 120Vac
- **2** = 240Vac
- **6** = 600Vac/dc
- **Blank** = 600Vac for ERS, CERS type

Ampere
- **1** = 30A
- **2** = 60A
- **3** = 100A
- **4** = 200A
- **5** = 400A
- **6** = 600A
- **7** = 800A
- **030** = 30A (ER, CER)
- **040** = 40A (CER)
- **060** = 60A (ER, CER)
- **080** = 80A (CER)

Fused/Non Fused & Neutral
- **N** = Fused with Neutral
- **SN** = Fusible Switched Neutral
- **NF** = Non Fused no Neutral on G
- **U** = Non Fused no Neutral
- **F** = Fused no Neutral

Enclosure Rating
- **G** = Type 1
- **R** = Type 3R
- **D** = Type 12 or 12/3R
- **W** = Type 4X (grade 304 stainless steel)
- **X** = Type 7/9 for type DS. 4X non metallic for CER.
- **Blank**= Type 1 for G type

Design Type
- **K** =K switch Heavy Duty design
- **B** =General Duty design
- **Blank**=G type 200A and above K switch design
- **Blank**=ER, CER enclosed rotary
- **Blank**=DS hazardous location
- **Blank**=GP plug fuse

Options ②
- **X** =Enviroline (Stainless operating mechanism in stainless enclosure)
- **W** =Window for CDH type only
- **316** =Grade 316 Stainless Steel

Heavy Duty Non-fusible Double-Throw

Contents

Description	*Page*
Selection Guide	2
Product Overview	3
Catalogue Configurator	4
Options and Accessories	5
Technical Data and Specifications	7
Standard Terminal Capacities	7
Fuse Dimensions	8
Short Circuit Ratings	10
Flex/Satellite Modifications	12
Air Condition Disconnects	15
General Duty Switches	18
Heavy Duty Switches	22
Heavy Duty Six-Pole Switches	32
Heavy Duty Double Throw Switches	35
Product Description, Features	35
Standards and Certifications	35
Product Selection	36
Technical Data and Dimensions	39
Enviroline Switches	41
Heavy Duty Window Switches	44
Heavy Duty Receptacle Switches	48
Heavy Duty Voltage Indicator Switches	52
Hazardous Location Switches	54
Heavy Duty Quick Connect Switches	56
Solar Switches	60
Zone Blasting Switches	65
Elevator Control Switches	66
Grounding Switches	68
Enclosed Motor Disconnects	70
Pringle Bolted Pressure Switches	78
OEM Operating Mechanisms	85
CSA Enclosure Designations	91

Double-Throw Switches

Application Description

Used to manually transfer a load from one power source to an alternate source, or to connect a single source of power to either of two different loads.

Product Description

- 30–1200A
- Horsepower rated
- 600 Vac, 250 Vdc maximum
- 2, 3, 4, 6 pole designs available
- Enclosures type 1, 3R, 12, 4, painted steel and 4X stainless steel
- 800–1200A fusible utilize common set of fuses; two Source 1 load applications
- Fusible or non-fusible
- Fusible and non-fusible switches are 100% load break and 100% load make rated
- Suitable for use on systems capable of delivering 100,000 rms symmetrical fault current when used with class J, R, or T fuses.
- The handle operating mechanism actuates either the upper or lower switch. When the handle is in the centre position, both switches are OFF.
- The handle and door are interlocked to keep the door closed when a switch is ON and hold the handle OFF when the door is open
- The continuous load current of fusible switches is not to exceed 80% of the rating of fuses employed in other than motor circuits. Non-fusible switches are 100% continuous duty rated
- Double throw switches are not approved for service entrance in Canada, per CEC and C22.2 No.4.
- Wiring configuration from factory allows a single load to be supplied by a normal or alternate source. Can be field modified to allow two loads to be alternately supplied by a single power source
- Clear line shield (provided on **fusible** double-throw) protects against accidental contact with energized parts. Probe holes enable the user to test if the line side is energized without removing the shield
- For accessories, refer to **Pages 5** and **6**
- Window option available for type 12 and 4X enclosures
- For factory modifications refer to **Pages 12** through **14**
- Same heavy duty features per page 23 for double throw switches, unless noted.
- Triple padlocking capability. Two on door and up to three 3/8" shank locks in 'OFF' (centre) handle position. Special modification available for locking in 'ON' position, see page 12 note 4.

Standards and Certifications

- CSA Certified File No. 69473
- Meets C22.2 No. 4 standard for enclosed switches.
- ISO 9001:2008

1DT363

600 Vac Heavy-Duty, Fusible, Double-Throw

Ampere Rating Main and Standby	Fuse Class Provision	Maximum Horsepower Ratings with Time Delay Fuses: Single-Phase AC 480V	Single-Phase AC 600V	Three-Phase AC 480V	Three-Phase AC 600V	DC 250V	Type 1 Enclosure Indoor Catalogue Number	Type 3R Enclosure Rainproof Catalogue Number	Type 12 ③ Enclosure Dust-Tight Catalogue Number	Type 4X Enclosure④ Corrosion-Resistant, Stainless Steel Catalogue Number
Three-Pole—600 Vac—250 Vdc										
30	H	7-1/2	10	15	20	—	**1DT361**	**3DT361**	①	①
60	H	20	25	30	50	—	**1DT362**	**3DT362**	①	①
100	H	30	40	60	75	—	**1DT363**	**3DT363**	①	①
200	H	50	50	125	150	40	**1DT364**	**3DT364**	①	①
400	T	—	—	250	350	50	**1DT365**	**3DT365**	①	①④
600	T	—	—	—	—	—	**1DT366**	**3DT366**	①	①④
800	T	—	—	—	—	—	**DT367FGK**	**DT367FRK**	①	①④
1200	L	—	—	—	—	—	**DT368FGK**	**DT368FRK**	—	①④

3DT363NF

600 Vac Heavy-Duty, Non-Fusible, Double-Throw

Ampere Rating Main and Standby	Maximum Horsepower Ratings: Single-Phase AC 480V	Single-Phase AC 600V	Three-Phase AC 480V	Three-Phase AC 600V	DC 250V	Type 1 Enclosure Indoor Catalogue Number	Type 3R Enclosure Rainproof Catalogue Number	Type 12 ③ Enclosure Dust-Tight Catalogue Number	Type 4X Enclosure④ Corrosion-Resistant, Stainless Steel Catalogue Number
Two-Pole—600 Vac—250 Vdc									
30	7-1/2	10	—	—	5	**1DT261NF**	**3DT261NF**	①	①
60	20	25	—	—	10	**1DT262NF**	**3DT262NF**	①	①
100	40	50	—	—	20	**1DT263NF**	**3DT263NF**	①	①
200	50	50	—	—	40	**1DT264NF** ②	**3DT264NF** ②	①	①
400	—	—	—	—	50	**1DT265NF**	**3DT265NF**	①	①④
600	—	—	—	—	50	**1DT266NF**	**3DT266NF**	①	①④
800	—	—	—	—	50	**DT267UGK**	**DT267URK**	①	①④
1200	—	—	—	—	50	**DT268UGK**	**DT268URK**	—	①④
Three-Pole—600 Vac—250 Vdc									
30	7-1/2	10	20	30	5	**1DT361NF**	**3DT361NF**	**12DT361NF**	**4DT361NF**
60	20	25	50	60	10	**1DT362NF**	**3DT362NF**	**12DT362NF**	**4DT362NF**
100	40	50	75	100	20	**1DT363NF**	**3DT363NF**	**12DT363NF**	**4DT363NF**
200	50	50	125	150	40	**1DT364NF**	**3DT364NF**	**12DT364NF**	**4DT364NF**
400	—	—	250	350	50	**1DT365NF**	**3DT365NF**	**12DT365NF**	①④
600	—	—	250	350	50	**1DT366NF**	**3DT366NF**	①③	①④
800	—	—	250	350	50	**1DT367NF**	**3DT367NF**	①③	①④
800	—	—	250	350	50	**1DT367NF-N**	**3DT367NF-N**	①③	①④
1200	—	—	250	350	50	**DT368UGK**	**DT368URK**	—	①④

Notes

① Contact Customer Support (1-800-268-3578) for availability of this product.

② Rated 600 Vdc, 50 hp in addition to ratings shown in table.

③ Type 12 enclosures (30–1200A) can be field modified to meet Type 3R rainproof requirements when a factory provided drain hole is opened.

④ 30-200A, stainless steel 4X standard, 400-800A Type 4 painted steel standard. For stainless @ 400-1200A add 'SS' to catalogue number suffix.

Note: For 'J' Fusing on 600V DT, 30, 60, 100, 600A not available..
For 200A reposition loadside fuse base to accept J fuse.
For 400A order DT400JK.

For applications with bonded generators, switched neutrals required, for 240V use 3 pole switch, for 600V use 4 pole switch, for factory installation of solid or switched neutrals refer to page 13.
For window option see factory modifications pages 12-14.

Dimensions

Approximate Dimensions in Inches (mm)

Heavy-Duty, Non-Fusible, 240V and 600V, Two and Three-Pole, Double-Throw

Ampere Rating	Width (W)	Height (H)	Depth (D)	Depth (D2)	Weight Lbs (kg)
Type 1, 3R					
30	11.94 (303.3)	24.63 (625.6)	9.88 (251.0)	5.38 (136.7)	34 (15)
60	11.94 (303.3)	24.63 (625.6)	9.88 (251.0)	5.38 (136.7)	34 (15)
100	11.94 (303.3)	24.63 (625.6)	9.88 (251.0)	5.38 (136.7)	34 (15)
200	19.56 (496.8)	37.38 (949.5)	11.25 (285.8)	6.10 (154.9)	80 (36)
400	23.13 (587.5)	53.81 (1366.8)	12.50 (317.5)	7.25 (184.2)	130 (59)
600	24.13 (612.9)	63.31 (1608.1)	14.13 (358.9)	8.88 (225.6)	160 (73)
800	24.13 (612.9)	63.31 (1608.1)	14.13 (358.9)	8.88 (225.6)	175 (79)
1200	42.62 (1082.5)	78.11 (1984.0)	25.62 (650.7)	20.47 (519.9)	471(214)
Type 12, 4X Stainless Steel, 4 Painted Steel >200A					
30	12.00 (304.8)	25.88 (657.4)	10.25 (260.4)	5.50 (139.7)	60 (27)
60	12.00 (304.8)	25.88 (657.4)	10.25 (260.4)	5.50 (139.7)	60 (27)
100	12.00 (304.8)	25.88 (657.4)	10.25 (260.4)	5.50 (139.7)	60 (27)
200	19.50 (495.3)	41.00 (1041.4)	11.63 (295.4)	6.48 (164.6)	105 (48)
400	23.05 (587)	57.48 (1460)	12.5 (317)	7.25 (184.2)	135 (61)
600	24.07 (612)	67.02 (1702)	14.05 (357)	8.88 (225.6)	180 (82)
800	24.07 (612)	67.02 (1702)	14.05 (357)	8.88 (225.6)	200 (91)

Heavy-Duty, Fusible, 240V and 600V, Three-Pole, Double-Throw

Ampere Rating	Width (W)	Height (H)	Depth (D)	Depth (D2)	Weight Lbs (kg)
Type 1, 3R					
30	11.94 (303.3)	36.63 (930.4)	9.88 (251.0)	5.38 (136.7)	44 (20)
60	11.94 (303.3)	36.63 (930.4)	9.88 (251.0)	5.38 (136.7)	44 (20)
100	11.94 (303.3)	36.63 (930.4)	9.88 (251.0)	5.38 (136.7)	44 (20)
200	19.56 (496.8)	50.88 (1292.4)	11.25 (285.8)	6.10 (154.9)	95 (43)
400	25.38 (644.7)	74.75 (1898.7)	14.13 (358.9)	8.88 (225.6)	195 (89)
600	27.44 (697.0)	86.13 (2187.7)	14.13 (358.9)	8.88 (225.6)	230 (104)
800	28.12 (714.2)	58.86 (1495.0)	25.62 (650.7)	20.47 (519.9)	277(126)
1200	42.62 (1082.5)	78.11 (1984.0)	25.62 (650.7)	20.47 (519.9)	501(228)
Type 12, 4X Stainless Steel, 4 Painted Steel >200A					
30	12.00 (304.8)	39.81 (1011.2)	10.25 (260.4)	5.50 (139.7)	45 (20)
60	12.00 (304.8)	39.81 (1011.2)	10.25 (260.4)	5.50 (139.7)	45 (20)
100	12.00 (304.8)	39.81 (1011.2)	10.25 (260.4)	5.50 (139.7)	45 (20)
200	19.56 (496.8)	55.63 (1413.0)	11.63 (295.4)	6.46 (164.1)	100 (45)
400	25.32 (643)	77 (1956)	14.05 (357)	8.92 (226)	—
600	25.32 (643)	77 (1956)	14.05 (357)	8.92 (226)	—

Type 1-3R Double-Throw 30–1200A

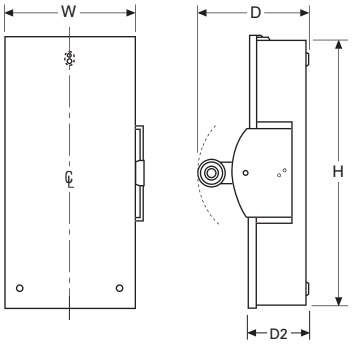

Type 12-4X Double-Throw 30–1200A

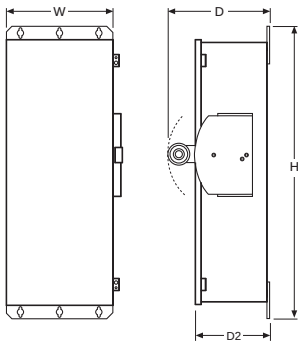

Heavy-Duty, Non-Fusible, 600V, Four and Six-Pole①, Double-Throw

Ampere Rating	Width (W)	Height (H)	Depth (D)	Depth (D2)	Weight Lbs (kg)
Type 1, 3R					
30	17.75 (451)	24.63 (625)	9.88 (251.0)	5.28 (134)	45 (20.5)
60	17.75 (451)	24.63 (625)	9.88 (251.0)	5.28 (134)	45 (20.5)
100	17.75 (451)	24.63 (625)	9.88 (251.0)	5.28 (134)	45 (20.5)
200	19.50 (497)	37.25 (946)	11.25 (285.8)	6.10 (155)	95 (43)
400	27.50 (697)	63.31 (1608)	14.13 (358.9)	8.88 (226)	160 (72.6)
600	27.50 (697)	63.31 (1608)	14.13 (358.9)	8.88 (226)	185 (84)
800	27.50 (697)	63.31 (1608)	14.13 (358.9)	8.88 (226)	185 (84)

Notes

Six pole dimensions listed 30, 60, 100A only.