HPS Imperator® Machine Tool Industrial Control Transformer

The Perfect Solution

The HPS Imperator line of machine tool industrial control transformers are specifically designed to meet the high inrush industrial applications where electromagnetic components such as relays, solenoids etc. are used.

- 11 standard voltage groups
- VA range from 50VA to 1500VA
- Available with standard secondary and optional primary fuse kits
- Optional finger safe terminal covers
- Patented unique terminal block design
- Innovative fusing method
- Lifetime warranty (limited)

The HPS Imperator provides the perfect solution for any applications.

Superior Quality and Value

The HPS Imperator design, utilizing superior insulation systems and being constructed with high quality silicon steel laminations for optimum performance, will meet or exceed UL and CE standards.

Backed by an industry leading LIFETIME warranty, the HPS Imperator industrial control transformer line offers superior performance, quality and value.

c UL us

STANDARDS

HPS Imperator Series Control Transformers meet or exceed the standards established by UL, IEC, and NEMA.

Standard	File #	VA Size
UL (ANSI/UL 506)	E50394	All
IEC 61558		All (excluding PH***AJ & PH***AR)
NEMA (ST-1)		All

CE

At HPS, we rate the VA capacity of our transformers at the output ..... where it counts. Other transformer manufacturers rate their capacity on the input side of the transformer, which can result in a 5% to 20% lower actual VA at the output.

© Hammond Power Solutions Inc.

Data subject to change without notice.

MACHINE TOOL INDUSTRIAL CONTROL TRANSFORMER SELECTION

Selecting a Control Transformer requires that you have first hand knowledge of the application for the transformer and that you understand some basic terms related to the selection process. By using the following information, you will be sure to select the HPS Imperator® Control Transformer which best meets your application.

The HPS Imperator Series machine tool control transformers are specifically designed for high inrush applications requiring reliable output voltage stability. Designed to meet industrial applications where electromagnetic devices such as relays, solenoids, etc. are used, the HPS Imperator series transformers maximize inrush capability and output voltage regulation when electromagnetic devices are initially energized.

To select the proper transformer, three characteristics of the load circuit must first be determined. They are total steady-state (sealed) VA, total inrush VA, and inrush load power factor.

(A) The total steady state "sealed" VA is the amount of VA that the transformer must supply to the load circuit for an extended length of time. Simply add the total steady-state VA of all devices in your control circuit. The operating VA data of these components is available from the manufacturers.

(B) The total inrush VA is the amount of VA that the transformer must supply for all components in the control circuit which are energized together. Some consideration to the start-up sequence may be required. Inrush VA should be obtained from the device manufacturer.

(C) The inrush load power factor is difficult to determine without detailed vector analysis of all the control circuit components. Such information is not generally available. Therefore, HPS is recommending that a 40% power factor be utilized. Although some other control transformer manufacturers still recommend a power factor of only 20%, HPS, through recent tests conducted on many popular brands of control devices, has determined that the 40% power factor value is more accurate.

Once the above circuit variables have been determined, transformer selection is a six step process.

SIX EASY STEPS

1. Determine what your Primary (supply) and Secondary (output) voltage requirements are, as well as your required frequency (i.e. 60 Hz)

2. Calculate the Total Sealed VA of your circuit. (See Step A)

3. Calculate the Inrush VA by adding the inrush VA of all components being energized together. Remember to add the sealed VA of all components that do not have inrush VA, (lamps, timers etc.) as they present a load to the transformer during maximum inrush. If the inrush for the components in your circuit are not known, assume a 40% Inrush Power Factor.

4. Calculate the Total Inrush VA using one of the two methods:

A. Total Inrush VA = $\sqrt{\textbf{(VA sealed)}^2 + \textbf{(VA inrush)}^2}$

OR

B. Total Inrush VA = **VA Sealed + VA Inrush**

Note: method B will result in a slightly larger transformer being selected.

For VA sealed definition please refer to 1 (A).
For VA inrush definition please refer to 1 (B).

5. If the nominal supply voltage does not fluctuate more than 5%, then reference the 90% secondary voltage column in the Regulation Data Table for the correct VA rating.

If the supply voltage varies upwards of 10%, the 95% secondary voltage column should be used to size the transformer.

Current standards require electromagnetic devices to operate reliably at a minimum of 85% of their rated voltage. However, contact life may be affected with continuous start-ups at that voltage level. Therefore, the minimum 85% secondary voltage column should only be used as a reference.

6. Using the regulation data tables below, select the appropriate VA rated transformer:

A) With a continuous VA rating that is equal to or greater than the value in Step 2.

B) With a maximum inrush VA equal to or greater than the value obtained in Step 4.

To determine the correct HPS Transformer and its Catalog Number, just refer to the tables in this catalog for the voltage ratings, frequency and corresponding VA required.

HPS IMPERATOR® TRANSFORMERS REGULATION DATA TABLE

Continuous VA	Inrush VA @ 40% Power Factor		
Transformer Nameplate Rating	85% Secondary Voltage	90% Secondary Voltage	95% Secondary Voltage
50	330	259	192
75	350	258	170
100	620	467	321
150	895	699	512
250	1596	1229	880
350	2464	1889	1345
500	3939	2854	1819
750	6422	4778	3228
1000	9842	7102	4530
1500	12797	9018	5489

It is recommended that a Control Transformer be sized at a 40% Power Factor. Some components in a circuit, such as electromagnetic devices, typically operate at that level due to their inherently lower power factor. Selecting a transformer at 40% Power Factor will more than adequately size the unit for all the various loads in the circuit.

© Hammond Power Solutions Inc.
Data subject to change without notice.

Features & Benefits

- 600V class, machine tool rated industrial control transformers
- 11 standard multi primary and secondary voltage groups available[1]
- 50/60 Hertz (60Hz on PH***AJ & PH***AR)
- VA range from 50 to 1500[1]
- Superior insulation system
    - 50-150VA, temperature rise 55°C, insulation class 105°C
    - 250-1500VA, temperature rise 80°C, insulation class 130°C
- Constructed with high quality silicon steel laminations that provide optimum performance and reliability
- Encapsulated copper wound coils encased in a custom injection molded cover, protects coils and terminations from moisture, dirt and other industrial airborne contaminants
- Mounting Feet: made of heavy steel and welded or bolted to the core, these mounting feet provide superior strength in a compact design.
- Termination: combination slot/Phillips #6 screw, complete with SEMS washer (suitable for 18 AWG to 14 AWG solid or 14 AWG stranded wire)
- Standard SEMS washers - supplied on all units[2]
- Standard secondary fuse kits - utilizing 13/32” x 1 1/2” midget/type CC fuse clips
- Optional primary fuse kits available utilizing 13/32” x 1 1/2” midget/type CC fuse clips
- Optional finger safe terminal covers available on all units
- Seismically certified in accordance with 2009 IBC for S_{DS} <= 2.00g, z/h = 1.0 and I_P = 1.5
- UL Listed (approved for U.S. and Canada)
- CE Mark standard on all units (excluding PH*AR and PH*AJ)
- LIFETIME Warranty (Limited)
- RoHS Compliant

[1] special voltages and VA sizes available upon request
[2] excluding PH750PG, PH1000PG, PH750MLI, PH1000MLI

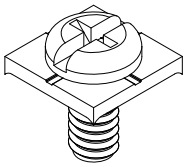

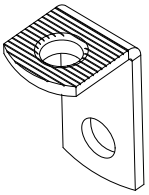

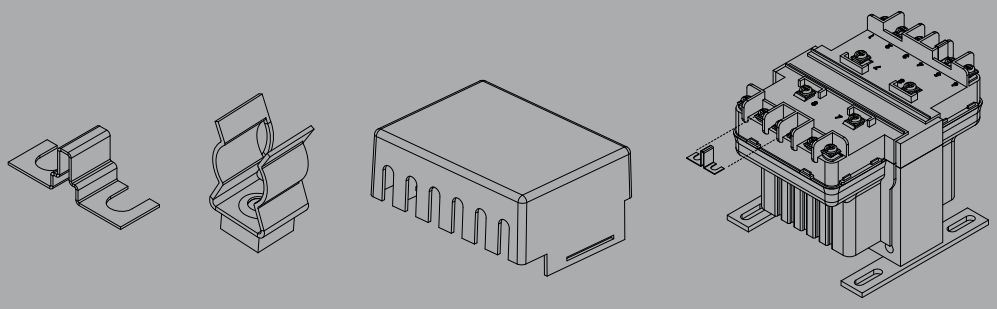

WARRANTY
Lifetime

© Hammond Power Solutions Inc.
Data subject to change without notice.

Features & Benefits Continued

Terminal connection numbers molded into the terminal block and correspond to the nameplate and wiring diagrams, make connecting the HPS Imperator quick and simple.

SEMS washer allows for easy connection of supply or load wires with or without terminal connectors.

Standard secondary and optional primary fuse kits utilizing 13/32" x 1 1/2" midget/type CC fuse clips provide an economical solution to your fusing requirements (fuses not available).

Innovative terminal block design provides for easy hook-up and installation of fuse clips.

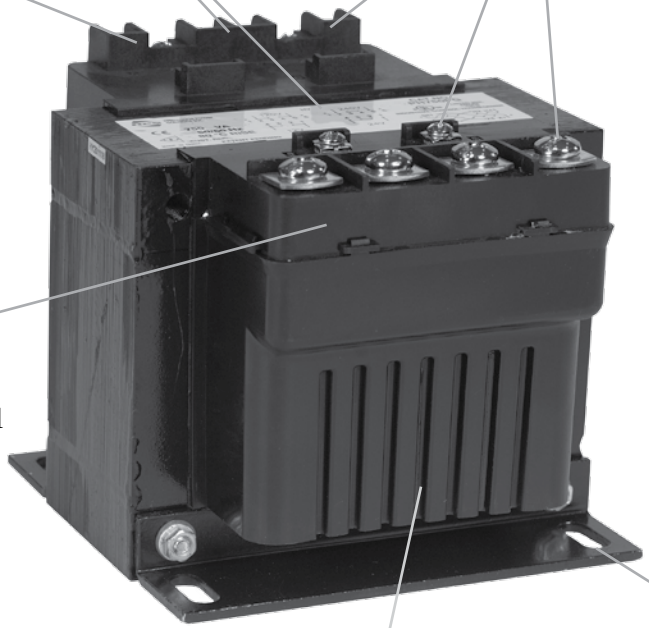

Optional removable finger safe terminal covers available on all units.

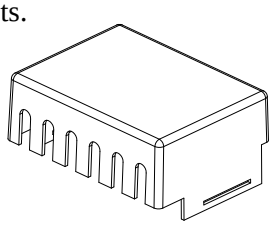

Custom injection molded coil cover with its unique "fin shaped" design combines superior cooling properties with a clean, bold look.

Made of heavy steel and welded or bolted to the core, these mounting feet provide superior strength in a compact design.

© Hammond Power Solutions Inc.

Data subject to change without notice.

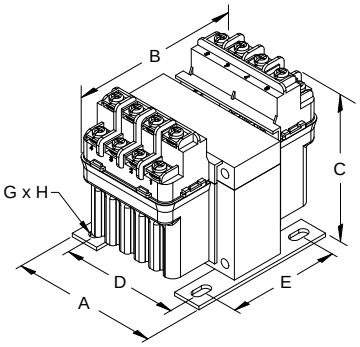

FIGURE A

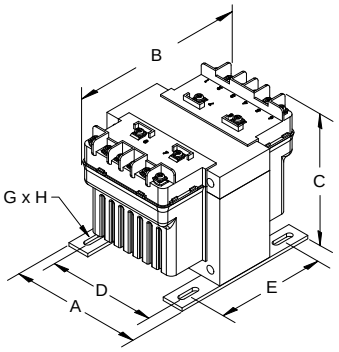

FIGURE B

Group A

Primary Voltage: **600** | 575 | 550
Secondary Voltage: **120 X 240** | 115 X 230 | 110 X 220

c UL us

60 Hertz

VA Rating	Catalog Number	Mtg. Fig.	Output Amps	Overall Dimensions			Mounting Centers		Mounting Slot	Height with Finger Guard	Depth with Finger Guard	Approx. Ship Weight Lbs.	Optional Primary Fuse Kit P/N	Optional Unfused and Fused Finger Guard Kit P/N
				A	B	C	D	E	G X H					
50	**PH50AJ**	A	0.42/0.21	3.00	3.81	3.19	2.50	2.25	0.22 x 0.44	4.00	5.25	2.70	PFK1	FG1*/FGF1
75	**PH75AJ**	A	0.63/0.31	3.25	3.69	3.56	2.63	2.50	0.22 x 0.44	4.37	5.13	2.80	PFK1	FG2*/FGF2
100	**PH100AJ**	A	0.83/0.42	3.25	4.06	3.63	2.63	2.63	0.22 x 0.44	4.44	5.50	4.10	PFK1	FG2*/FGF2
150	**PH150AJ**	B	1.25/0.63	4.00	4.63	3.81	3.38	2.75	0.22 x 0.75	4.50	6.13	4.90	PFK2	FG3
250	**PH250AJ**	B	2.08/1.04	4.50	5.25	3.81	3.75	3.13	0.22 x 0.75	4.50	6.75	6.97	PFK2	FG3
350	**PH350AJ**	B	2.92/1.46	4.50	4.88	4.44	3.75	3.75	0.22 x 0.75	4.94	6.38	8.30	PFK3	FG4
500	**PH500AJ**	B	4.17/2.08	4.75	5.56	4.31	4.06	3.44	0.31 x 0.94	4.81	7.06	11.6	PFK3	FG4
750	**PH750AJ**	B	6.25/3.13	5.13	6.38	4.31	4.38	4.00	0.31 x 0.81	4.81	7.88	16.6	PFK3	FG4
1000	**PH1000AJ**	B	8.33/4.17	5.25	6.50	4.94	4.50	4.09	0.31 x 0.81	5.56	8.00	21.0	PFK3	FG5
1500	**PH1500AJ**	B	12.5/6.25	5.25	7.56	4.94	4.50	5.44	0.38 x 1.00	5.56	9.06	30.0	PFK3	FG5

Secondary fuse clips, fuse clip mounting screws and primary and secondary voltage links/jumpers supplied standard with transformers. **All dimensions in inches**
***Note: Unfused finger guard kits are marked with an asterisk, for more information refer to page 45.**
Refer to page 64 for wiring schematic drawing. Custom voltage and VA sizes available upon request.

Group B

Primary Voltage: **600** | 575 | 550
Secondary Voltage: **12 X 24** | 11.5 X 23 | 11 X 22

c UL us

60 Hertz

VA Rating	Catalog Number	Mtg. Fig.	Output Amps	Overall Dimensions			Mounting Centers		Mounting Slot	Height with Finger Guard	Depth with Finger Guard	Approx. Ship Weight Lbs.	Optional Primary Fuse Kit P/N	Optional Unfused and Fused Finger Guard Kit P/N
				A	B	C	D	E	G X H					
50	**PH50AR**	A	4.17/2.08	3.00	3.81	3.19	2.50	2.25	0.22 x 0.44	4.00	5.25	2.70	PFK1	FG1*/FGF1
75	**PH75AR**	A	6.25/3.13	3.25	3.69	3.56	2.63	2.50	0.22 x 0.44	4.37	5.13	2.80	PFK1	FG2*/FGF2
100	**PH100AR**	A	8.33/4.17	3.25	4.19	3.63	2.63	2.63	0.22 x 0.44	4.44	5.63	4.50	PFK1	FG2*/FGF2
150	**PH150AR**	B	12.5/6.25	4.00	4.94	3.81	3.38	2.75	0.22 x 0.75	4.50	6.44	5.70	PFK2	FG3
250	**PH250AR**	B	20.8/10.4	4.50	5.44	3.81	3.75	3.13	0.22 x 0.75	4.50	6.94	7.50	PFK2	FG3
350	**PH350AR**	B	29.2/14.6	4.50	4.88	4.44	3.75	3.75	0.22 x 0.75	4.94	6.38	8.30	PFK3	FG4
500	**PH500AR**	B	41.7/20.8	4.75	5.56	4.31	4.06	3.44	0.31 x 0.94	4.81	7.06	11.6	PFK3	FG4

Secondary fuse clips, fuse clip mounting screws and primary and secondary voltage links/jumpers supplied with transformers. **All dimensions in inches**
***Note: Unfused finger guard kits are marked with an asterisk, for more information refer to page 45.**
Refer to page 65 for wiring schematic drawing. Custom voltages and VA sizes available upon request.

© Hammond Power Solutions Inc.
Data subject to change without notice.

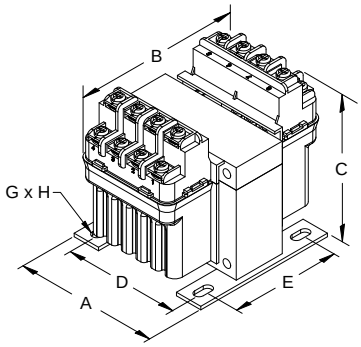

FIGURE A

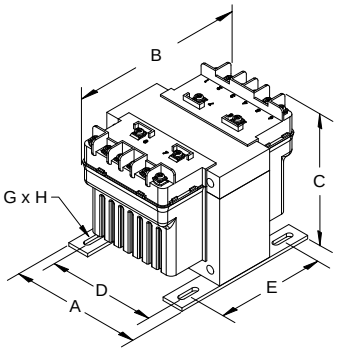

FIGURE B

Group C

Primary Voltage: **240 X 480** ‖ 230 X 460 ‖ 220 X 440
Secondary Voltage: **120 X 240** ‖ 115 X 230 ‖ 110 X 220

c UL us CE **50/60 Hertz**

VA Rating	Catalog Number	Mtg. Fig.	Output Amps	Overall Dimensions			Mounting Centers		Mounting Slot	Height with Finger Guard	Depth with Finger Guard	Approx. Ship Weight Lbs.	Optional Primary Fuse Kit P/N	Optional Unfused and Fused Finger Guard Kit P/N
				A	B	C	D	E	G X H					
50	**PH50MQMJ**	A	0.42/0.21	3.00	4.38	3.19	2.50	2.25	0.22 x 0.44	4.00	5.82	3.50	PFK1	FG1*/FGF1
75	**PH75MQMJ**	A	0.63/0.31	3.25	3.88	3.56	2.63	2.50	0.22 x 0.44	4.37	5.32	3.54	PFK1	FG2*/FGF2
100	**PH100MQMJ**	A	0.83/0.42	3.25	4.19	3.63	2.63	2.63	0.22 x 0.44	4.44	5.63	4.50	PFK1	FG2*/FGF2
150	**PH150MQMJ**	B	1.25/0.63	4.00	4.94	3.81	3.38	2.75	0.22 x 0.75	4.50	6.44	5.70	PFK2	FG3
250	**PH250MQMJ**	B	2.08/1.04	4.50	5.44	3.81	3.75	3.13	0.22 x 0.75	4.50	6.94	7.50	PFK2	FG3
350	**PH350MQMJ**	B	2.92/1.46	4.50	5.19	4.44	3.75	3.75	0.22 x 0.75	4.94	6.69	10.1	PFK3	FG4
500	**PH500MQMJ**	B	4.17/2.08	4.75	5.94	4.31	4.06	3.81	0.31 x 0.94	4.81	7.44	14.2	PFK3	FG4
750	**PH750MQMJ**	B	6.25/3.13	5.13	6.69	4.31	4.38	4.31	0.31 x 0.81	4.81	8.19	16.6	PFK3	FG4
1000	**PH1000MQMJ**	B	8.33/4.17	5.25	6.81	4.94	4.50	4.44	0.31 x 0.81	5.56	8.31	23.6	PFK3	FG5
1500	**PH1500MQMJ**	B	12.5/6.25	5.25	8.19	4.94	4.50	6.06	0.38 x 1.00	5.56	9.69	32.0	PFK3	FG5

Secondary fuse clips, fuse clip mounting screws and primary and secondary voltage links/jumpers supplied standard with transformers. **All dimensions in inches**
***Note: Unfused finger guard kits are marked with an asterisk, for more information refer to page 45.**
Refer to page 66 for wiring schematic drawing. Custom voltages and VA sizes available upon request.
***** Available with FACTORY INSTALLED Primary and Secondary Fuse Kits up to 1500VA. To order, add the suffix "-FK" to the above part number. Refer to page 44 for details. *****

Group D

Primary Voltage: **240 X 480** ‖ 230 X 460 ‖ 220 X 440
Secondary Voltage: **12 X 24** ‖ 11.5 X 23 ‖ 11 X 22

c UL us CE **50/60 Hertz**

VA Rating	Catalog Number	Mtg. Fig.	Output Amps	Overall Dimensions			Mounting Centers		Mounting Slot	Height with Finger Guard	Depth with Finger Guard	Approx. Ship Weight Lbs.	Optional Primary Fuse Kit P/N	Optional Unfused and Fused Finger Guard Kit P/N
				A	B	C	D	E	G X H					
50	**PH50QR**	A	4.17/2.08	3.00	4.38	3.19	2.50	2.25	0.22 x 0.44	4.00	5.82	3.50	PFK1	FG1*/FGF1
75	**PH75QR**	A	6.25/3.13	3.25	3.88	3.56	2.63	2.50	0.22 x 0.44	4.37	5.32	3.54	PFK1	FG2*/FGF2
100	**PH100QR**	A	8.33/4.17	3.25	4.19	3.63	2.63	2.63	0.22 x 0.44	4.44	5.63	4.50	PFK1	FG2*/FGF2
150	**PH150QR**	B	12.5/6.25	4.00	4.94	3.81	3.38	2.75	0.22 x 0.75	4.50	6.44	5.70	PFK2	FG3
250	**PH250QR**	B	20.8/10.4	4.50	5.44	3.81	3.75	3.13	0.22 x 0.75	4.50	6.94	7.50	PFK2	FG3
350	**PH350QR**	B	29.2/14.6	4.50	5.19	4.44	3.75	3.75	0.22 x 0.75	4.94	6.69	10.1	PFK3	FG4
500	**PH500QR**	B	41.7/20.8	4.75	5.94	4.31	4.06	3.81	0.31 x 0.94	4.81	7.44	14.2	PFK3	FG4

Secondary fuse clips, fuse clip mounting screws and primary and secondary voltage links/jumpers supplied standard with transformers. **All dimensions in inches**
***Note: Unfused finger guard kits are marked with an asterisk, for more information refer to page 45.**
Refer to page 67 for wiring schematic drawing. Custom voltages and VA sizes available upon request.

© Hammond Power Solutions Inc.
Data subject to change without notice.

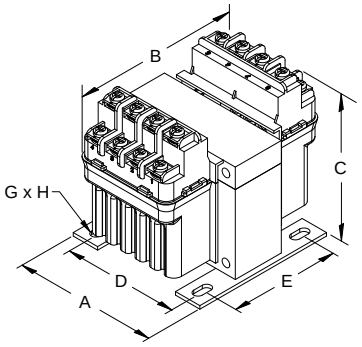

FIGURE A

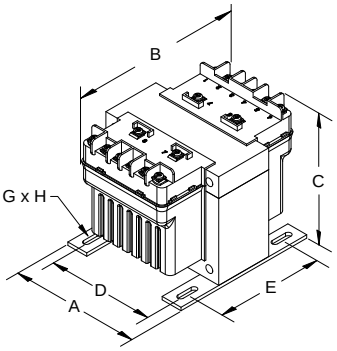

FIGURE B

Group E

Primary Voltage: **208 X 416** ‖ 200 X 400 ‖ 190 X 380
Secondary Voltage: **120 X 240** ‖ 115 X 230 ‖ 110 X 220

c UL us CE **50/60 Hertz**

VA Rating	Catalog Number	Mtg. Fig.	Output Amps	Overall Dimensions			Mounting Centers		Mounting Slot	Height with Finger Guard	Depth with Finger Guard	Approx. Ship Weight Lbs.	Optional Primary Fuse Kit P/N	Optional Unfused and Fused Finger Guard Kit P/N
				A	B	C	D	E	G X H					
50	**PH50SP**	A	0.42/0.21	3.00	4.38	3.19	2.50	2.25	0.22 x 0.44	4.00	5.82	3.50	PFK1	FG1*/FGF1
75	**PH75SP**	A	0.63/0.31	3.25	3.88	3.56	2.63	2.50	0.22 x 0.44	4.37	5.32	3.54	PFK1	FG2*/FGF2
100	**PH100SP**	A	0.83/0.42	3.25	4.19	3.63	2.63	2.63	0.22 x 0.44	4.44	5.63	4.50	PFK1	FG2*/FGF2
150	**PH150SP**	B	1.25/0.63	4.00	4.94	3.81	3.38	2.75	0.22 x 0.75	4.50	6.44	5.70	PFK2	FG3
250	**PH250SP**	B	2.08/1.04	4.50	5.44	3.81	3.75	3.13	0.22 x 0.75	4.50	6.94	7.50	PFK2	FG3
350	**PH350SP**	B	2.92/1.46	4.50	5.19	4.44	3.75	3.75	0.22 x 0.75	4.94	6.69	10.1	PFK3	FG4
500	**PH500SP**	B	4.17/2.08	4.75	5.94	4.31	4.06	3.81	0.31 x 0.94	4.81	7.44	14.2	PFK3	FG4
750	**PH750SP**	B	6.25/3.13	5.13	6.69	4.31	4.38	4.31	0.31 x 0.81	4.81	8.19	16.6	PFK3	FG4
1000	**PH1000SP**	B	8.33/4.17	5.25	6.81	4.94	4.50	4.44	0.31 x 0.81	5.56	8.31	23.6	PFK3	FG5

Secondary fuse clips, fuse clip mounting screws and primary and secondary voltage links/jumpers supplied standard with transformers. **All dimensions in inches**
***Note: Unfused finger guard kits are marked with an asterisk, for more information refer to page 45.**
Refer to page 68 for wiring schematic drawing. Custom voltages and VA sizes available upon request.

Group F

Primary Voltage: **120 X 240** ‖ 115 X 230 ‖ 110 X 220
Secondary Voltage: **120 X 240** ‖ 115 X 230 ‖ 110 X 220

c UL us CE **50/60 Hertz**

VA Rating	Catalog Number	Mtg. Fig.	Output Amps	Overall Dimensions			Mounting Centers		Mounting Slot	Height with Finger Guard	Depth with Finger Guard	Approx. Ship Weight Lbs.	Optional Primary Fuse Kit P/N	Optional Unfused and Fused Finger Guard Kit P/N
				A	B	C	D	E	G X H					
50	**PH50PP**	A	0.42/0.21	3.00	4.38	3.19	2.50	2.25	0.22 x 0.44	4.00	5.82	3.50	PFK1	FG1*/FGF1
75	**PH75PP**	A	0.63/0.31	3.25	3.88	3.56	2.63	2.50	0.22 x 0.44	4.37	5.32	3.54	PFK1	FG2*/FGF2
100	**PH100PP**	A	0.83/0.42	3.25	4.19	3.63	2.63	2.63	0.22 x 0.44	4.44	5.63	4.50	PFK1	FG2*/FGF2
150	**PH150PP**	B	1.25/0.63	4.00	4.94	3.81	3.38	2.75	0.22 x 0.75	4.50	6.44	5.70	PFK2	FG3
250	**PH250PP**	B	2.08/1.04	4.50	5.44	3.81	3.75	3.13	0.22 x 0.75	4.50	6.94	7.50	PFK2	FG3
350	**PH350PP**	B	2.92/1.46	4.50	5.19	4.44	3.75	3.75	0.22 x 0.75	4.94	6.69	10.1	PFK3	FG4
500	**PH500PP**	B	4.17/2.08	4.75	5.94	4.31	4.06	3.81	0.31 x 0.94	4.81	7.44	14.2	PFK3	FG4
750	**PH750PP**	B	6.25/3.13	5.13	6.69	4.31	4.38	4.31	0.31 x 0.81	4.81	8.19	16.6	PFK3	FG4
1000	**PH1000PP**	B	8.33/4.17	5.25	6.81	4.94	4.50	4.44	0.31 x 0.81	5.56	8.31	23.6	PFK3	FG5
1500	**PH1500PP**	B	12.5/6.25	5.25	8.19	4.94	4.50	6.06	0.38 x 1.0	5.56	9.69	32.0	PFK3	FG5

Secondary fuse clips, fuse clip mounting screws and primary and secondary voltage links/jumpers supplied standard with transformers. **All dimensions in inches**
***Note: Unfused finger guard kits are marked with an asterisk, for more information refer to page 45.**
Refer to page 69 for wiring schematic drawing. Custom voltages and VA sizes available upon request.

© Hammond Power Solutions Inc.
Data subject to change without notice.

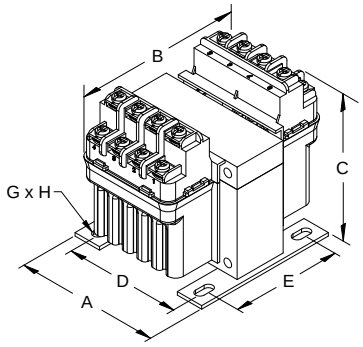

FIGURE A

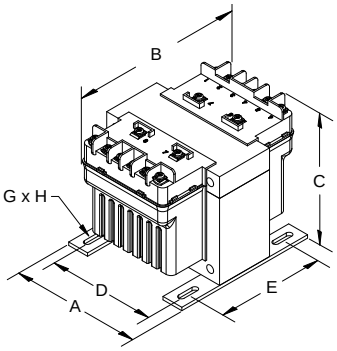

FIGURE B

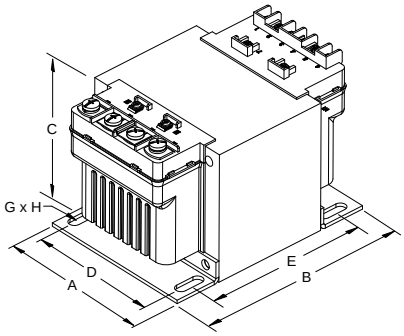

FIGURE C

Group G

Primary Voltage: **120 X 240** || 115 X 230 || 110 X 220
Secondary Voltage: **12 X 24** || 11.5 X 23 || 11 X 22

c UL us CE **50/60 Hertz**

VA Rating	Catalog Number	Mtg. Fig.	Output Amps	Overall Dimensions			Mounting Centers		Mounting Slot	Height with Finger Guard	Depth with Finger Guard	Approx. Ship Weight Lbs.	Optional Primary Fuse Kit P/N	Optional Unfused and Fused Finger Guard Kit P/N
				A	B	C	D	E	G X H					
50	**PH50PG**	A	4.17/2.08	3.00	4.38	3.19	2.50	2.25	0.22 x 0.44	4.00	5.82	3.50	PFK1	FG1*/FGF1
75	**PH75PG**	A	6.25/3.13	3.25	3.88	3.56	2.63	2.50	0.22 x 0.44	4.37	5.32	3.54	PFK1	FG2*/FGF2
100	**PH100PG**	A	8.33/4.17	3.25	4.19	3.63	2.63	2.63	0.22 x 0.44	4.44	5.63	4.50	PFK1	FG2*/FGF2
150	**PH150PG**	B	12.5/6.25	4.00	4.94	3.81	3.38	2.75	0.22 x 0.75	4.50	6.44	5.70	PFK2	FG3
250	**PH250PG**	B	20.8/10.4	4.50	5.44	3.81	3.75	3.13	0.22 x 0.75	4.50	6.94	7.50	PFK2	FG3
350	**PH350PG**	B	29.2/14.6	4.50	5.19	4.44	3.75	3.75	0.22 x 0.75	4.94	6.69	10.1	PFK3	FG4
500	**PH500PG**	B	41.7/20.8	4.75	5.94	4.31	4.06	3.81	0.31 x 0.94	4.81	7.44	14.2	PFK3	FG4
750	**PH750PG**	C	62.5/31.3	5.13	6.69	4.31	4.38	4.31	0.31 x 0.81	4.81	8.19	16.6	PFK3	FG5
1000	**PH1000PG**	C	83.3/41.7	5.25	6.81	4.94	4.50	4.44	0.31 x 0.81	5.56	8.31	23.6	PFK3	FG5

Secondary fuse clips and fuse clip mounting screws supplied standard with transformers up to and including 500VA. Primary and Secondary voltage links/jumpers supplied standard with transformers. **All dimensions in inches**
***Note: Unfused finger guard kits are marked with an asterisk, for more information refer to page 45.**
Refer to page 70 for wiring schematic drawing. Custom voltages and VA sizes available upon request.
***** Available with FACTORY INSTALLED Primary and Secondary Fuse Kits up to 1000VA. To order, add the suffix "-FK" to the above part number. Refer to page 44 for details. *****

Group H

Primary Voltage: 600/480/240 || **575/460/230** || 550/440/220
Secondary Voltage: 120/100 || **115/95** || 110/90

c UL us CE **50/60 Hertz**

VA Rating	Catalog Number	Mtg. Fig.	Output Amps	Overall Dimensions			Mounting Centers		Mounting Slot	Height with Finger Guard	Depth with Finger Guard	Approx. Ship Weight Lbs.	Optional Primary Fuse Kit P/N	Optional Unfused and Fused Finger Guard Kit P/N
				A	B	C	D	E	G X H					
50	**PH50MBMH**	A	0.43	3.25	4.06	3.63	2.63	2.63	0.22 x 0.44	4.44	5.50	4.10	PFK5	FG2*/FGF2
75	**PH75MBMH**	A	0.65	3.25	4.19	3.63	2.63	2.63	0.22 x 0.44	4.44	5.63	4.50	PFK5	FG2*/FGF2
100	**PH100MBMH**	B	0.87	4.00	4.63	3.81	3.38	2.75	0.22 x 0.75	4.50	6.13	4.90	PFK6	FG3
150	**PH150MBMH**	B	1.30	4.00	5.44	3.81	3.38	2.75	0.22 x 0.75	4.50	6.94	7.60	PFK6	FG3
250	**PH250MBMH**	B	2.17	4.50	5.19	4.44	3.75	3.75	0.22 x 0.75	4.94	6.69	10.1	PFK6	FG4
350	**PH350MBMH**	B	3.04	4.50	5.56	4.44	3.75	3.75	0.22 x 0.75	4.94	7.06	11.0	PFK7	FG4
500	**PH500MBMH**	B	4.35	4.75	6.69	4.31	4.06	4.50	0.31 x 0.94	4.81	8.19	16.3	PFK7	FG4
750	**PH750MBMH**	B	6.52	5.25	6.81	4.94	4.50	4.44	0.31 x 0.81	5.56	8.31	23.6	PFK7	FG5
1000	**PH1000MBMH**	B	8.70	5.25	8.19	4.94	4.50	5.81	0.31 x 0.81	5.56	9.69	31.2	PFK7	FG5
1500	**PH1500MBMH**	B	13.0	5.25	8.19	4.94	4.50	6.06	0.38 x 1.0	5.56	9.69	32.0	PFK7	FG5

Secondary fuse clips, fuse clip mounting screws and primary and secondary voltage links/jumpers supplied standard with transformers. **All dimensions in inches**
***Note: Unfused finger guard kits are marked with an asterisk, for more information refer to page 45.**
Refer to page 71 for wiring schematic drawing. Custom voltage and VA sizes available upon request.

© Hammond Power Solutions Inc.
Data subject to change without notice.