COTTON DUST MOPS

Performance & value

Cotton blended dust mops are an economical choice for those dusty industrial jobs where a facility's appearance is a prime consideration.

COTTON INDUSTRIAL, TREATED

The blended-cotton industrial dust mops are designed for use in facilities where large volumes of dust are present on smooth floors. These mops are treated with a dust control additive to turn dust into lint and hold it within the mop's yarn. Yarn is heat-set so it can be laundered.

	18 in.	24 in.	36 in.	48 in.	60 in.	pack
slip-on for universal break away frame	12718	12724	12736	12748	-	10
tie-on for 3½ in. rigid frame	14518	14524	14536	14548	-	10
	-	-	-	-	14560	5
tie-on for 5 in. universal break away or rigid frame	22718	22724	22736	22748	-	10

COTTON VALUE, UNTREATED

For general dust mopping duties, these basic mops provide good value. They are easily cleaned by brushing out over a waste can.

untreated	18 in.	24 in.	36 in.	48 in.	60 in.	pack
tie-on	16618	16624	16636	16648	-	10
	-	-	-	-	16660	5

COTTON WEDGE, TREATED

The treated cotton wedge mop is an excellent tool for picking up dust when the area to be mopped is small. Sold complete with a treated 6 by 8 inch wedge shaped dust mop and 48 inch metal powder coated handle.

mop type	item	pack
complete	14010	10
refill mop	14310	

UNIVERSAL BREAK AWAY FRAME

The very best in durability

This workhorse is the perfect tool for dust mopping with any five-inch style of dust mop. It's also the most durable frame ever made.

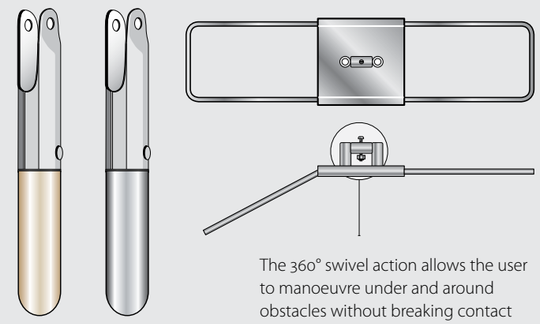

The 360° swivel action allows the user to manoeuvre under and around obstacles without breaking contact with the floor. This keeps all the dust where it belongs: in the mop.

wood handle & frame	size [in]	pack
12618	18	
12624	24	5
12636	36	
12648	48	3

60-in. handles	item	pack
hardwood-swivel	12600	10
aluminum-swivel	12602	

360°

degrees of movement

total fingertip control

RIGID FRAME

Frame & clip-on handle

For tie-on or envelope-style dust mops, a rigid frame and handle are the right choices. These rigid frames come with a vinyl-coated 60-inch handle that clips to the centre bar.

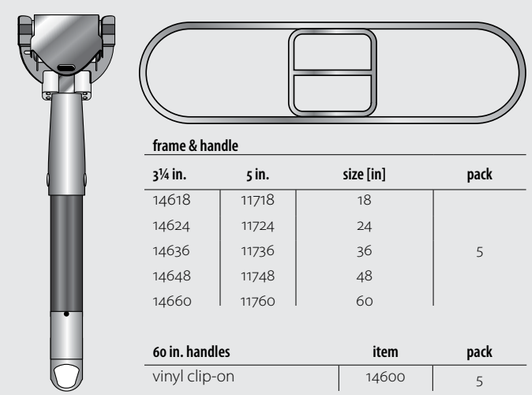

frame & handle			
3¼ in.	5 in.	size [in]	pack
14618	11718	18	
14624	11724	24	
14636	11736	36	5
14648	11748	48	
14660	11760	60	

60 in. handles	item	pack
vinyl clip-on	14600	5

180°

degrees of movement

lock-down control

Swivel handle can be locked in place for large, unobstructed areas such as hallways or gymnasium floors.