Long Jaw Vernier Caliper

SERIES 534

FEATURES

- Long jaws for measuring hard-to-reach features.
- Supplied in fitted wooden case.

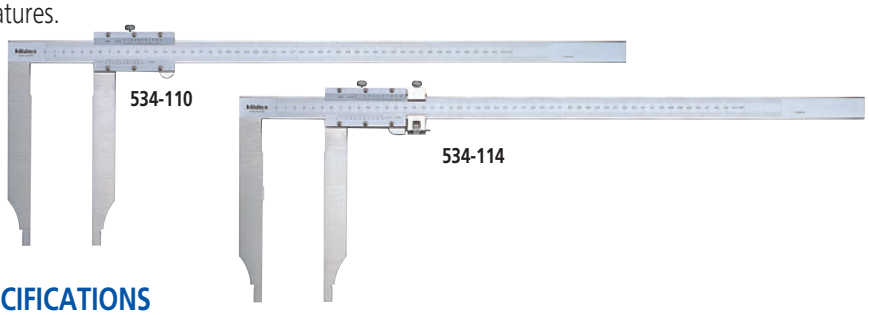

SPECIFICATIONS

Metric with metric/metric dual scale without fine adjustment

Range*	Order No.	Accuracy	Graduation		Mass (g)
			Lower Scale	Upper Scale	
0 (10) - 300mm	**534-109**	±0.07mm	0.05mm	0.05mm	400
0 (20) - 500mm	**534-110**	±0.13mm	0.05mm	0.05mm	1,400

*( ): Minimum dimension in ID measurement

Metric with metric/metric dual scale

Range*	Order No.	Accuracy	Graduation		Mass (g)
			Lower Scale	Upper Scale	
0 (10) - 300mm	**534-113**	±0.04mm	0.02mm	0.02mm	460
0 (20) - 500mm	**534-114**	±0.06mm	0.02mm	0.02mm	1,500
0 (20) - 750mm	**534-115**	±0.08mm	0.02mm	0.02mm	2,900
0 (20) - 1000mm	**534-116**	±0.10mm	0.02mm	0.02mm	3,500

*( ): Minimum dimension in ID measurement

Metric/Inch with metric/inch dual scale

Range*	Order No.	Accuracy	Graduation		Mass (g)
			Lower Scale	Upper Scale	
0 (10) - 300mm / 0 (.3") - 12"	**534-101**	±0.07mm	0.05mm	1/128"	460
0 (10) - 300mm / 0 (.3") - 12"	**534-105**	±0.04mm	0.02mm	.001"	460
0 (20) - 500mm / 0 (.8") - 20"	**534-102**	±0.13mm	0.05mm	1/128"	1,500
0 (20) - 500mm / 0 (.8") - 20"	**534-106**	±0.06mm	0.02mm	.001"	1,500
0 (20) - 700mm / 0 (.8") - 30"	**534-103**	±0.16mm	0.05mm	1/128"	2,900
0 (20) - 700mm / 0 (.8") - 30"	**534-107**	±0.08mm	0.02mm	.001"	2,900
0 (20) - 1000mm / 0 (.8") - 40"	**534-104**	±0.20mm	0.05mm	1/128"	3,500
0 (20) - 1000mm / 0 (.8") - 40"	**534-108**	±0.10mm	0.02mm	.001"	3,500

*( ): Minimum dimension in ID measurement

Inch with inch/inch dual scale

Range*	Order No.	Accuracy	Graduation		Mass (g)
			Lower Scale	Upper Scale	
0 (.3") - 12"	**534-117**	±.002"	.001"	.001"	400
0 (.8") - 20"	**534-118**	±.003"	.001"	.001"	1500
0 (.8") - 30"	**534-119**	±.004"	.001"	.001"	2900
0 (.8") - 40"	**534-120**	±.004"	.001"	.001"	3500

*( ): Minimum dimension in ID measurement

DIMENSIONS

Unit: mm

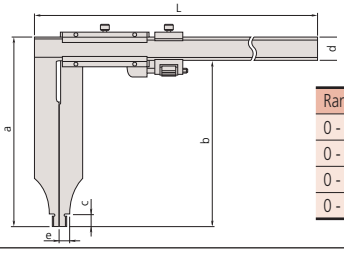

Range	L	a	b	c	d	e
0 - 12" / 0 - 300mm	445	110	90	12	20	7
0 - 20" / 0 - 500mm	682	225	200	18.5	25	12
0 - 30" / 0 - 750mm	995	232	200	18.5	32	12
0 - 40" / 0 - 1000mm	1230	232	200	18.5	32	12

Technical Data

Accuracy: Refer to the list of specifications.
Graduation: Refer to the list of specifications.

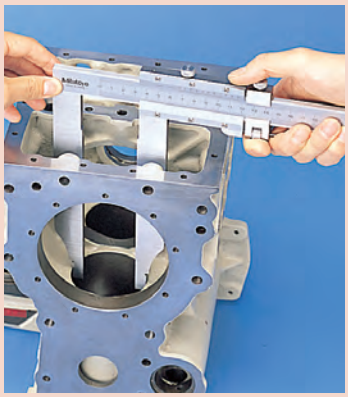

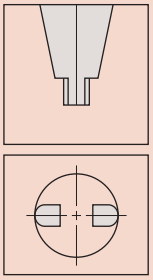

Round surface of jaws for accurate CD measurement